Safe Operation Practices • Set-Up • Operation • Maintenance • Service • Troubleshooting • Warranty

Cub Cadet®

OPERATOR'S MANUAL

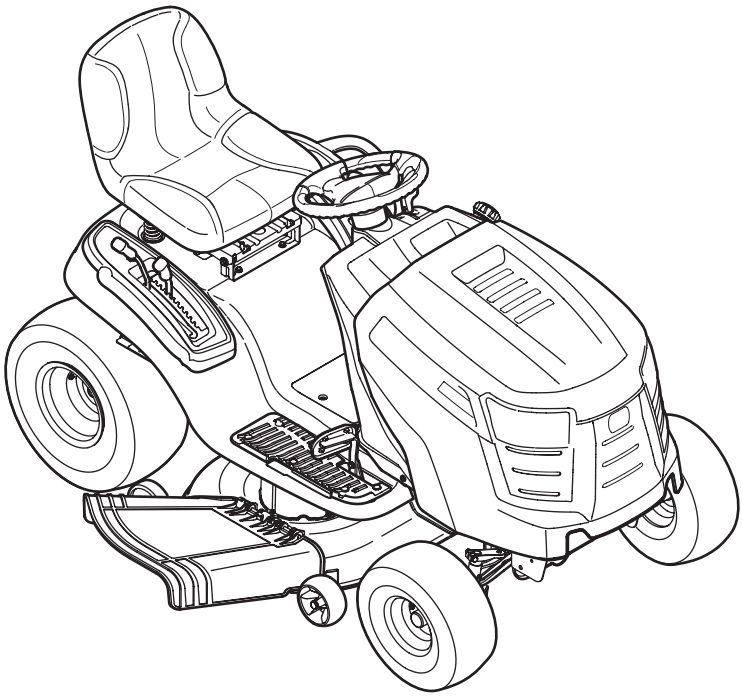

Hydrostatic Lawn Tractor — LTX 1042

⚠ WARNING

READ AND FOLLOW ALL SAFETY RULES AND INSTRUCTIONS IN THIS MANUAL BEFORE ATTEMPTING TO OPERATE THIS MACHINE. FAILURE TO COMPLY WITH THESE INSTRUCTIONS MAY RESULT IN PERSONAL INJURY.

CUB CADET LLC, P.O. BOX 361131 CLEVELAND, OHIO 44136-0019

Printed In USA

Form No. 769-04348
(August 27, 2008)

To The Owner

1

Thank You

Thank you for purchasing a Lawn Tractor manufactured by Cub Cadet LLC. It was carefully engineered to provide excellent performance when properly operated and maintained.

Please read this entire manual prior to operating the equipment. It instructs you how to safely and easily set up, operate and maintain your machine. Please be sure that you, and any other persons who will operate the machine, carefully follow the recommended safety practices at all times. Failure to do so could result in personal injury or property damage.

All information in this manual is relative to the most recent product information available at the time of printing. Review this manual frequently to familiarize yourself with the machine, its features and operation. Please be aware that this Operator's Manual may cover a range of product specifications for various models. Characteristics and features discussed and/or illustrated in this manual may not be applicable to all models. Cub Cadet LLC reserves the right to change product specifications, designs and equipment without notice and without incurring obligation.

If you have any problems or questions concerning the machine, phone your local Cub Cadet dealer or contact us directly. Cub Cadet's Customer Support telephone numbers, website address and mailing address can be found on this page. We want to ensure your complete satisfaction at all times.

Throughout this manual, all references to *right* and *left* side of the machine are observed from the operating position

The engine manufacturer is responsible for all engine-related issues with regards to performance, power-rating, specifications, warranty and service. Please refer to the engine manufacturer's Owner's/Operator's Manual, packed separately with your machine, for more information.

Table of Contents

Safe Operation Practices 3
Assembly & Set-Up 9
Controls & Features 12
Operation 15
Maintenance & Adjustment 19
Service 24
Troubleshooting 29
Replacement Parts 30
Attachments & Accessories 32
Warranty ..... *Back Cover*

Record Product Information

Before setting up and operating your new equipment, please locate the model plate on the equipment and record the information in the provided area to the right. You can locate the model plate by looking beneath the seat. This information will be necessary, should you seek technical support via our web site, Customer Support Department, or with a local authorized service dealer.

Model Number

☐☐☐☐☐☐☐☐☐☐☐

Serial Number

☐☐☐☐☐☐☐☐☐☐☐

Customer Support

If you have difficulty assembling this product or have any questions regarding the controls, operation, or maintenance of this machine, you can seek help from the experts. Choose from the options below:

◊ Visit us on the web at www.cubcadet.com

◊ Call a Customer Support Representative at (800) 965-4CUB

◊ Locate your nearest Cub Cadet Dealer at (877) 282-8684

◊ Write us at Cub Cadet LLC • P.O. Box 361131 • Cleveland, OH • 44136-0019

Important Safe Operation Practices

2

WARNING! This symbol points out important safety instructions which, if not followed, could endanger the personal safety and/or property of yourself and others. Read and follow all instructions in this manual before attempting to operate this machine. Failure to comply with these instructions may result in personal injury.
When you see this symbol. **HEED ITS WARNING!**

CALIFORNIA PROPOSITION 65

WARNING! Engine Exhaust, some of its constituents, and certain vehicle components contain or emit chemicals known to State of California to cause cancer and birth defects or other reproductive harm.

WARNING! Battery posts, terminals, and related accessories contain lead and lead compounds, chemicals known to the State of California to cause cancer and reproductive harm. *Wash hands after handling*

DANGER! This machine was built to be operated according to the safe operation practices in this manual. As with any type of power equipment, carelessness or error on the part of the operator can result in serious injury. This machine is capable of amputating hands and feet and throwing objects. Failure to observe the following safety instructions could result in serious injury or death.

General Operation

1. Read, understand, and follow all instructions on the machine and in the manual(s) before attempting to assemble and operate. Keep this manual in a safe place for future and regular reference and for ordering replacement parts.
2. Be familiar with all controls and their proper operation. Know how to stop the machine and disengage them quickly.
3. Never allow children under 14 years of age to operate this machine. Children 14 and over should read and understand the instructions and safe operation practices in this manual and on the machine and should be trained and supervised by an adult.
4. Never allow adults to operate this machine without proper instruction.
5. To help avoid blade contact or a thrown object injury, keep bystanders, helpers, children and pets at least 75 feet from the machine while it is in operation. Stop machine if anyone enters the area.
6. Thoroughly inspect the area where the equipment is to be used. Remove all stones, sticks, wire, bones, toys, and other foreign objects which could be picked up and thrown by the blade(s). Thrown objects can cause serious personal injury.
7. Plan your mowing pattern to avoid discharge of material toward roads, sidewalks, bystanders and the like. Also, avoid discharging material against a wall or obstruction which may cause discharged material to ricochet back toward the operator.
8. Always wear safety glasses or safety goggles during operation and while performing an adjustment or repair to protect your eyes. Thrown objects which ricochet can cause serious injury to the eyes.
9. Wear sturdy, rough-soled work shoes and close-fitting slacks and shirts. Loose fitting clothes and jewelry can be caught in movable parts. Never operate this machine in bare feet or sandals.
10. Be aware of the mower and attachment discharge direction and do not point it at anyone. Do not operate the mower without the discharge cover or entire grass catcher in its proper place.
11. Do not put hands or feet near rotating parts or under the cutting deck. Contact with the blade(s) can amputate hands and feet.

12. A missing or damaged discharge cover can cause blade contact or thrown object injuries.
13. Stop the blade(s) when crossing gravel drives, walks, or roads and while not cutting grass.
14. Watch for traffic when operating near or crossing roadways. This machine is not intended for use on any public roadway.
15. Do not operate the machine while under the influence of alcohol or drugs.
16. Mow only in daylight or good artificial light.
17. Never carry passengers.
18. Disengage blade(s) before shifting into reverse. Back up slowly. Always look down and behind before and while backing to avoid a back-over accident.
19. Slow down before turning. Operate the machine smoothly. Avoid erratic operation and excessive speed.
20. Disengage blade(s), set parking brake, stop engine and wait until the blade(s) come to a complete stop before removing grass catcher, emptying grass, unclogging chute, removing any grass or debris, or making any adjustments.
21. Never leave a running machine unattended. Always turn off blade(s), place transmission in neutral, set parking brake, stop engine and remove key before dismounting.
22. Use extra care when loading or unloading the machine into a trailer or truck. This machine should not be driven up or down ramp(s), because the machine could tip over, causing serious personal injury. The machine must be pushed manually on ramp(s) to load or unload properly.
23. Muffler and engine become hot and can cause a burn. Do not touch.
24. Check overhead clearances carefully before driving under low hanging tree branches, wires, door openings etc., where the operator may be struck or pulled from the machine, which could result in serious injury.
25. Disengage all attachment clutches, depress the brake pedal completely and shift into neutral before attempting to start engine.
26. Your machine is designed to cut normal residential grass of a height no more than 10". Do not attempt to mow through unusually tall, dry grass (e.g., pasture) or piles of dry leaves. Dry grass or leaves may contact the engine exhaust and/or build up on the mower deck presenting a potential fire hazard.
27. Use only accessories and attachments approved for this machine by the machine manufacturer. Read, understand and follow all instructions provided with the approved accessory or attachment.
28. Data indicates that operators, age 60 years and above, are involved in a large percentage of riding mower-related injuries. These operators should evaluate their ability to operate the riding mower safely enough to protect themselves and others from serious injury.
29. If situations occur which are not covered in this manual, use care and good judgment. Contact your customer service representative for assistance.

Slope Operation

Slopes are a major factor related to loss of control and tip-over accidents which can result in severe injury or death. All slopes require extra caution. If you cannot back up the slope or if you feel uneasy on it, do not mow it.

For your safety, use the slope gauge included as part of this manual to measure slopes before operating this machine on a sloped or hilly area. If the slope is greater than 15 degrees as shown on the slope gauge, do not operate this machine on that area or serious injury could result.

Do:

1. Mow up and down slopes, not across. Exercise extreme caution when changing direction on slopes.
2. Watch for holes, ruts, bumps, rocks, or other hidden objects. Uneven terrain could overturn the machine. Tall grass can hide obstacles.
3. Use slow speed. Choose a low enough speed setting so that you will not have to stop or shift while on the slope. Tires may lose traction on slopes even though the brakes are functioning properly. Always keep machine in gear when going down slopes to take advantage of engine braking action.
4. Follow the manufacturer's recommendations for wheel weights or counterweights to improve stability.
5. Use extra care with grass catchers or other attachments. These can change the stability of the machine.
6. Keep all movement on the slopes slow and gradual. Do not make sudden changes in speed or direction. Rapid engagement or braking could cause the front of the machine to lift and rapidly flip over backwards which could cause serious injury.
7. Avoid starting or stopping on a slope. If tires lose traction, disengage the blade(s) and proceed slowly straight down the slope.

Do Not:

1. Do not turn on slopes unless necessary; then, turn slowly and gradually downhill, if possible.
2. Do not mow near drop-offs, ditches or embankments. The mower could suddenly turn over if a wheel is over the edge of a cliff, ditch, or if an edge caves in.
3. Do not try to stabilize the machine by putting your foot on the ground.
4. Do not use a grass catcher on steep slopes.
5. Do not mow on wet grass. Reduced traction could cause sliding.
6. Do not shift to neutral and coast downhill. Over-speeding may cause the operator to lose control of the machine resulting in serious injury or death.
7. Do not tow heavy pull behind attachments (e.g. loaded dump cart, lawn roller, etc.) on slopes greater than 5 degrees. When going down hill, the extra weight tends to push the tractor and may cause you to loose control (e.g. tractor may speed up, braking and steering ability are reduced, attachment may jack-knife and cause tractor to overturn).

Children

1. Tragic accidents can occur if the operator is not alert to the presence of children. Children are often attracted to the machine and the mowing activity. They do not understand the dangers. Never assume that children will remain where you last saw them.
   a. Keep children out of the mowing area and in watchful care of a responsible adult other than the operator.
   b. Be alert and turn machine off if a child enters the area.
   c. Before and while backing, look behind and down for small children.
   d. Never carry children, even with the blade(s) shut off. They may fall off and be seriously injured or interfere with safe machine operation.
   e. Use extreme care when approaching blind corners, doorways, shrubs, trees or other objects that may block your vision of a child who may run into the path of the machine.
   f. **To avoid back-over accidents, always disengage the cutting blade(s) before shifting into Reverse. If equipped, the "Reverse Caution Mode" should not be used when children or others are around.**
   g. Keep children away from hot or running engines. They can suffer burns from a hot muffler.
   h. Remove key when machine is unattended to prevent unauthorized operation.
2. Never allow children under 14 years of age to operate this machine. Children 14 and over should read and understand the instructions and safe operation practices in this manual and on the machine and should be trained and supervised by an adult.

Towing

1. Tow only with a machine that has a hitch designed for towing. Do not attach towed equipment except at the hitch point.
2. Follow the manufacturers recommendation for weight limits for towed equipment and towing on slopes.
3. Never allow children or others in or on towed equipment.
4. On slopes, the weight of the towed equipment may cause loss of traction and loss of control.
5. Always use extra caution when towing with a machine capable of making tight turns (e.g. "zero-turn" ride-on mower). Make wide turns to avoid jack-knifing.
6. Travel slowly and allow extra distance to stop.
7. Do not shift to neutral and coast downhill.

Service

Safe Handling of Gasoline:

1. To avoid personal injury or property damage use extreme care in handling gasoline. **Gasoline is extremely flammable and the vapors are explosive.** Serious personal injury can occur when gasoline is spilled on yourself or your clothes which can ignite. Wash your skin and change clothes immediately.
   a. Use only an approved gasoline container.
   b. Never fill containers inside a vehicle or on a truck or trailer bed with a plastic liner. Always place containers on the ground away from your vehicle before filling.
   c. When practical, remove gas-powered equipment from the truck or trailer and refuel it on the ground. If this is not possible, then refuel such equipment on a trailer with a portable container, rather than from a gasoline dispenser nozzle.
   d. Keep the nozzle in contact with the rim of the fuel tank or container opening at all times until fueling is complete. Do not use a nozzle lock-open device.
   e. Extinguish all cigarettes, cigars, pipes and other sources of ignition.
   f. Never fuel machine indoors.
   g. Never remove gas cap or add fuel while the engine is hot or running. Allow engine to cool at least two minutes before refueling.
   h. Never over fill fuel tank. Fill tank to no more than ½ inch below bottom of filler neck to allow space for fuel expansion.
   i. Replace gasoline cap and tighten securely.
   j. If gasoline is spilled, wipe it off the engine and equipment. Move machine to another area. Wait 5 minutes before starting the engine.
   k. To reduce fire hazards, keep machine free of grass, leaves, or other debris build-up. Clean up oil or fuel spillage and remove any fuel soaked debris.
   l. Never store the machine or fuel container inside where there is an open flame, spark or pilot light as on a water heater, space heater, furnace, clothes dryer or other gas appliances.
   m. Allow a machine to cool at least five minutes before storing.

General Service

1. Never run an engine indoors or in a poorly ventilated area. Engine exhaust contains carbon monoxide, an odorless, and deadly gas.
2. Before cleaning, repairing, or inspecting, make certain the blade(s) and all moving parts have stopped. Disconnect the spark plug wire and ground against the engine to prevent unintended starting.

3. Periodically check to make sure the blades come to complete stop within approximately (5) five seconds after operating the blade disengagement control. If the blades do not stop within the this time frame, your machine should be serviced professionally by an authorized MTD Service Dealer.
4. Check brake operation frequently as it is subjected to wear during normal operation. Adjust and service as required.
5. Check the blade(s) and engine mounting bolts at frequent intervals for proper tightness. Also, visually inspect blade(s) for damage (e.g., excessive wear, bent, cracked). Replace the blade(s) with the original equipment manufacturer's (O.E.M.) blade(s) only, listed in this manual. "Use of parts which do not meet the original equipment specifications may lead to improper performance and compromise safety!"
6. Mower blades are sharp. Wrap the blade or wear gloves, and use extra caution when servicing them.
7. Keep all nuts, bolts, and screws tight to be sure the equipment is in safe working condition.
8. Never tamper with the safety interlock system or other safety devices. Check their proper operation regularly.
9. After striking a foreign object, stop the engine, disconnect the spark plug wire(s) and ground against the engine. Thoroughly inspect the machine for any damage. Repair the damage before starting and operating.
10. Never attempt to make adjustments or repairs to the machine while the engine is running.
11. Grass catcher components and the discharge cover are subject to wear and damage which could expose moving parts or allow objects to be thrown. For safety protection, frequently check components and replace immediately with original equipment manufacturer's (O.E.M.) parts only, listed in this manual. "Use of parts which do not meet the original equipment specifications may lead to improper performance and compromise safety!"
12. Do not change the engine governor settings or over-speed the engine. The governor controls the maximum safe operating speed of the engine.
13. Maintain or replace safety and instruction labels, as necessary.
14. Observe proper disposal laws and regulations for gas, oil, etc. to protect the environment.
15. According to the Consumer Products Safety Commission (CPSC) and the U.S. Environmental Protection Agency (EPA), this product has an *Average Useful Life* of seven (7) years, or 270 hours of operation. At the end of the *Average Useful Life* have the machine inspected annually by an authorized service dealer to ensure that all mechanical and safety systems are working properly and not worn excessively. Failure to do so can result in accidents, injuries or death.

Do not modify engine

To avoid serious injury or death, do not modify engine in any way. Tampering with the governor setting can lead to a runaway engine and cause it to operate at unsafe speeds. Never tamper with factory setting of engine governor.

Notice Regarding Emissions

Engines which are certified to comply with California and federal EPA emission regulations for SORE (Small Off Road Equipment) are certified to operate on regular unleaded gasoline, and may include the following emission control systems: Engine Modification (EM), Oxidizing Catalyst (OC), Secondary Air Injection (SAI) and Three Way Catalyst (TWC) if so equipped.

Spark Arrestor

WARNING! This machine is equipped with an internal combustion engine and should not be used on or near any unimproved forest-covered, brushcovered or grass-covered land unless the engine's exhaust system is equipped with a spark arrester meeting applicable local or state laws (if any).

If a spark arrester is used, it should be maintained in effective working order by the operator. In the State of California the above is required by law (Section 4442 of the California Public Resources Code). Other states may have similar laws. Federal laws apply on federal lands.
A spark arrester for the muffler is available through your nearest engine authorized service dealer or contact the service department, P.O. Box 361131 Cleveland, Ohio 44136-0019.

WARNING! Your Responsibility—Restrict the use of this power machine to persons who read, understand and follow the warnings and instructions in this manual and on the machine.

SAVE THESE INSTRUCTIONS!

Safety Symbols

This page depicts and describes safety symbols that may appear on this product. Read, understand, and follow all instructions on the machine before attempting to assemble and operate.

Symbol	Description
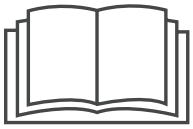	READ THE OPERATOR'S MANUAL(S) Read, understand, and follow all instructions in the manual(s) before attempting to assemble and operate
	DANGER— ROTATING BLADES Never carry passengers. Never carry children, even with the blades off.
	DANGER— ROTATING BLADES Always look down and behind before and while backing to avoid a back-over accident.
	WARNING— ROTATING BLADES Do not put hands or feet near rotating parts or under the cutting deck. Contact with the blade(s) can amputate hands and feet.
	WARNING—THROWN OBJECTS This machine may pick up and throw and objects which can cause serious personal injury.
	WARNING—THROWN OBJECTS This machine may pick up and throw and objects which can cause serious personal injury.
	BYSTANDERS Keep bystanders, helpers, children and pets at least 75 feet from the machine while it is in operation.
	WARNING— SLOPE OPERATION Do not operate this machine on a slope greater than 15 degrees.
	WARNING— HOT SURFACE Engine parts, especially the muffler, become extremely hot during operation. Allow engine and muffler to cool before touching.
	DANGER — ROTATING BLADES To reduce the risk of injury, keep hands and feet away. Do not operate unless discharge cover or grass catcher is in its proper place. If damaged, replace immediately.

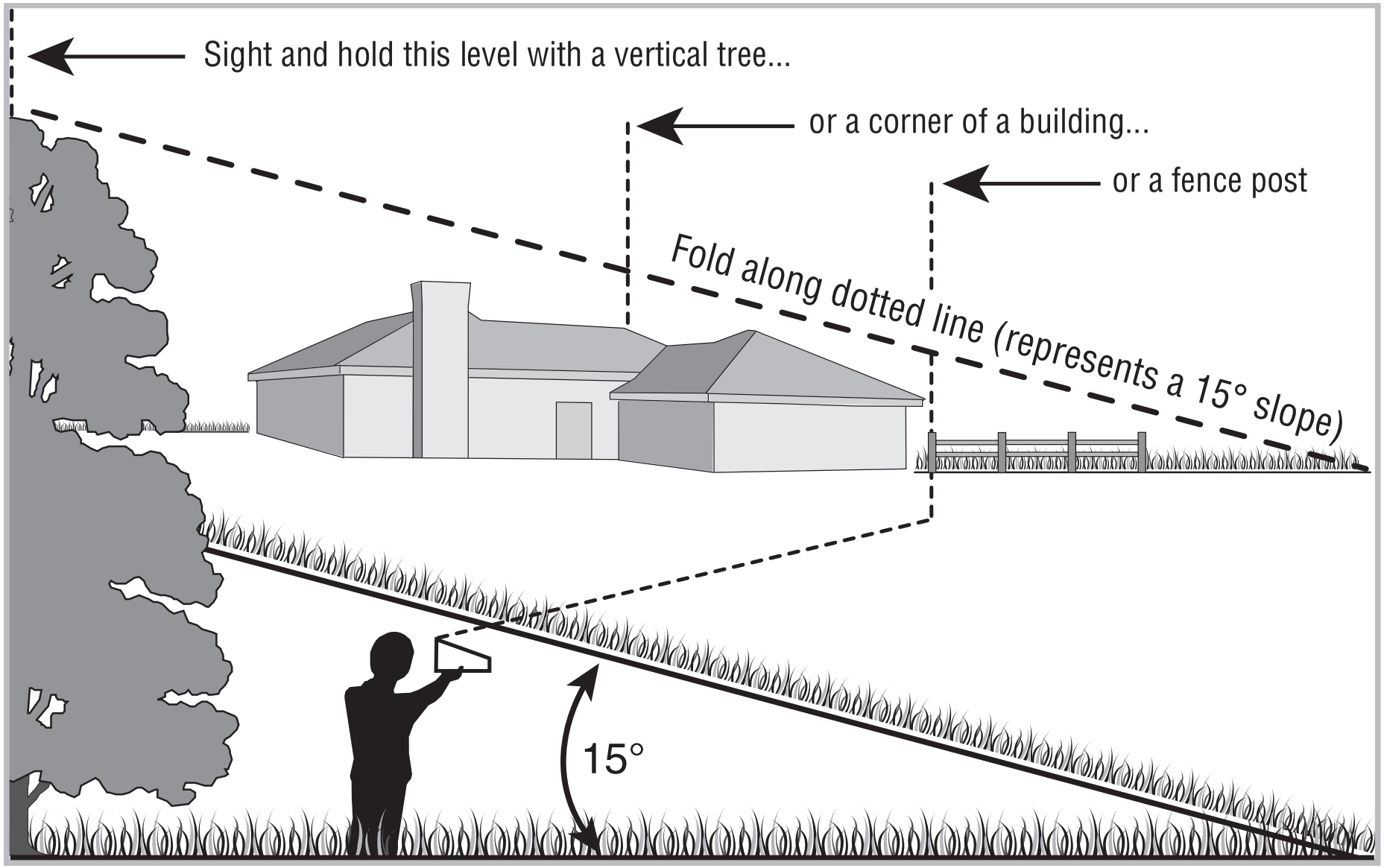

Use this page as a guide to determine slopes where you may not operate safely.

WARNING! Do not operate your lawn mower on such slopes. Do not mow on inclines with a slope in excess of 15 degrees (a rise of approximately 2-1/2 feet every 10 feet). A riding mower could overturn and cause serious injury. Operate riding mowers up and down slopes, never across the face of slopes.

Assembly & Set-Up

3

Contents of Crate

- One Lawn Tractor
- One Lawn Tractor Operator's Manual
- One Oil Drain Tube
- One Kohler Engine Operator's Manual
- One Deck Wash Hose Coupler

Tractor Set-Up

Moving The Tractor Manually

Your tractor's transmission is equipped with a hydrostatic relief valve for occasions when it is necessary to move the tractor manually. Opening this valve permits the fluid in the transmission to bypass its normal route, allowing the rear tires to "freewheel." To open the hydrostatic relief valve, proceed as follows:

1. Locate the hydrostatic bypass rod in the rear of the tractor. See Fig. 3-1.

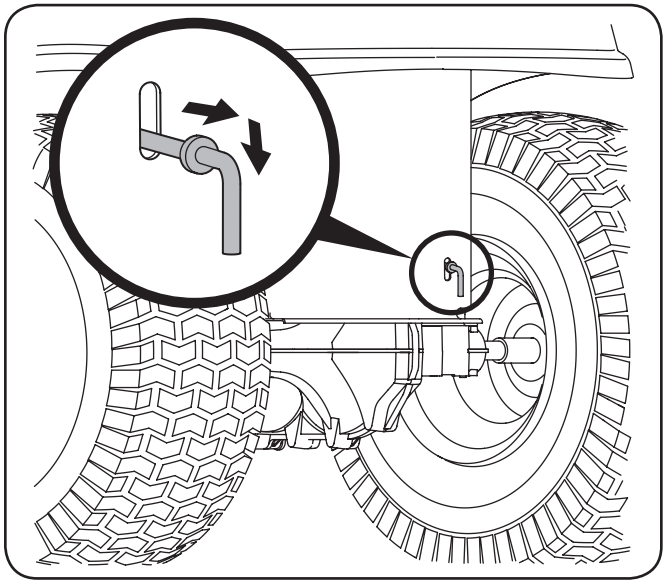

Figure 3-1

2. Pull the hydrostatic bypass rod outward, then down, to lock it in place.

NOTE: The transmission will NOT engage when the hydrostatic bypass rod is pulled out. Return the rod to its normal position prior to operating the tractor.

CAUTION: Never attempt to move the tractor manually without first opening the hydrostatic relief valve. Doing so will result in serious damage to the tractor's transmission.

Shipping Brace Removal

WARNING! Make sure the lawn tractor's engine is off, set the parking brake and remove the ignition key before removing the shipping brace.

1. Locate the shipping brace, if present, and warning tag found on the right side of the cutting deck. See Fig. 3-2.

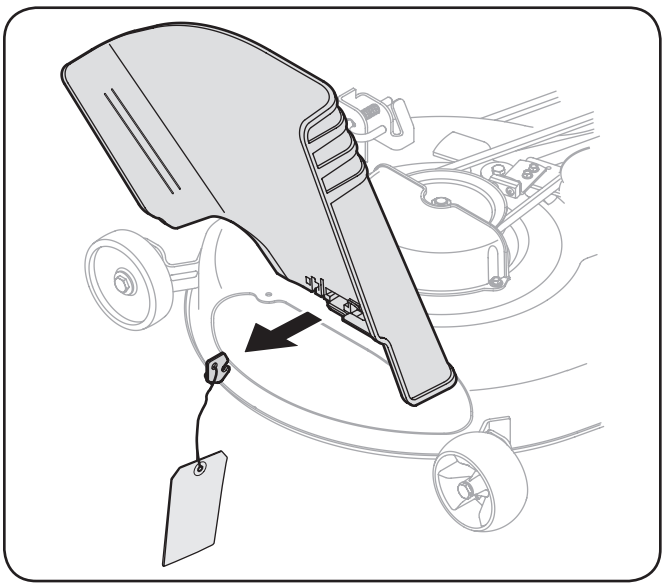

Figure 3-2

2. While holding the discharge chute with your left hand, remove the shipping brace with your right hand by grasping it between your thumb and index finger and rotating it clockwise.

WARNING! The shipping brace is used for packaging purposes only. Remove and discard the shipping brace before operating your lawn tractor.

WARNING! The mowing deck is capable of throwing objects. Failure to operate the riding mower without the discharge cover in the proper operating position could result in serious personal injury and/or property damage.

Attaching the Negative Battery Cable

NOTE: The positive battery terminal is marked Pos. (+). The negative battery terminal is marked Neg. (–).

The positive cable (heavy red wire) is secured to the positive battery terminal (+) with a hex bolt and hex nut at the factory.

The negative cable (heavy black wire) may be secured to the negative battery terminal at the factory. If it hasn't been attached, proceed as follows:

1. Raise the seat and remove the carriage bolt and hex nut from the negative cable (heavy black wire).
2. Remove the black plastic cover, if present, from the negative battery terminal and attach the negative cable to the negative battery terminal (–) with the bolt and wing nut. See Fig. 3-3.

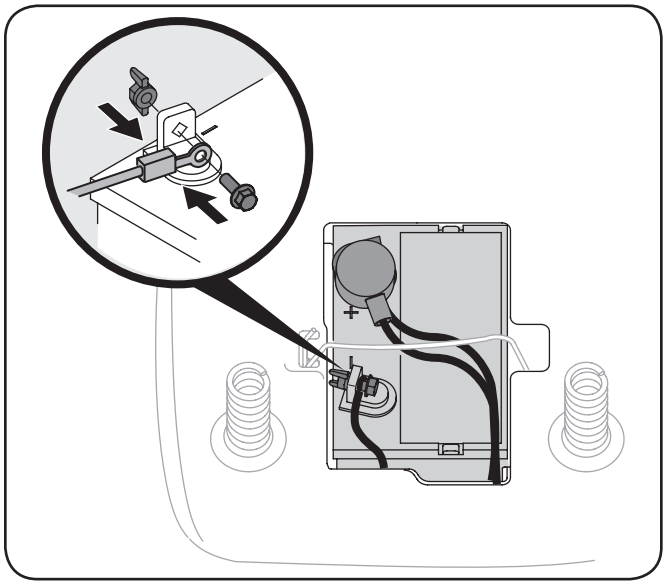

Figure 3-3

3. Make certain the hold-down rod is in position over the battery, securing it in place and make certain that the red rubber boot covers the positive battery terminal to help protect it from corrosion.

NOTE: If the battery is put into service after the date shown on top/side of battery, charge the battery as instructed in the Maintenance section of this manual prior to operating the tractor.

Checking Tire Pressure

WARNING! Maximum tire pressure under any circumstances is 30 psi. Equal tire pressure should be maintained at all times.

The tires on your tractor may be over inflated for shipping purposes. Reduce the tire pressure before operating the tractor. Recommended operating tire pressure is approximately 10 p.s.i. for the rear tires & 14 p.s.i. for the front tires. Check sidewall of tire for maximum p.s.i.

Setting the Deck Gauge Wheels

Move the tractor on a firm and level surface, preferably pavement, and proceed as follows

1. Select the height position of the cutting deck by placing the deck lift lever in the normally desired mowing height setting (any of the six different cutting height notches on the right fender).
2. Check the gauge wheels for contact or excessive clearance with the surface below. The deck gauge wheels should have between ¼" and ½" clearance above the ground as follows:

If the gauge wheels have excessive clearance or contact with the surface, adjust as follows:

a. Raise the deck lift handle to its highest setting.

b. Remove the front and rear gauge wheels by removing the lock nuts and shoulder screws which secure them to the deck. See Fig. 3-4

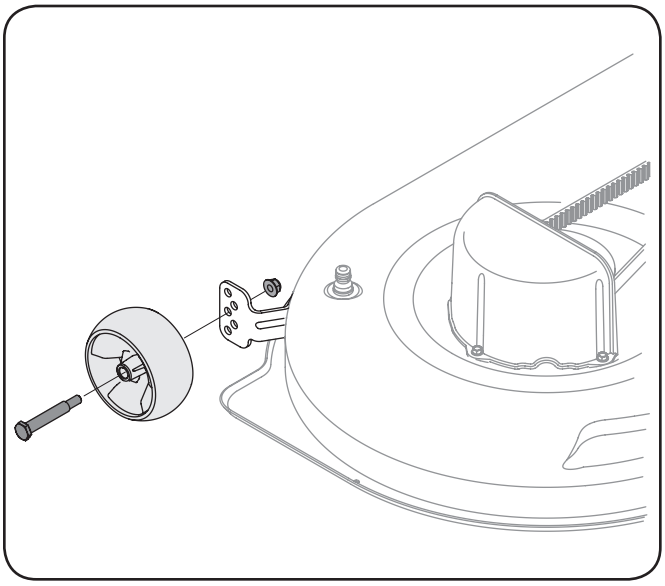

Figure 3-4

c. Place the deck lift lever in the desired mowing height setting.

d. Reinsert the shoulder screw (with each gauge wheel) into the index hole that leaves approximately ½" between the bottom of the wheel and the pavement.

Refer to Leveling the Deck in the Maintenance section of this manual for more detailed instructions regarding various deck adjustments.

Adjusting the Seat

To adjust the position of the seat, pull up and hold the seat adjustment lever. Slide the seat forward or rearward to the desired position; then release the adjustment lever. Make sure seat is locked into position before operating the tractor. See Fig. 3-5.

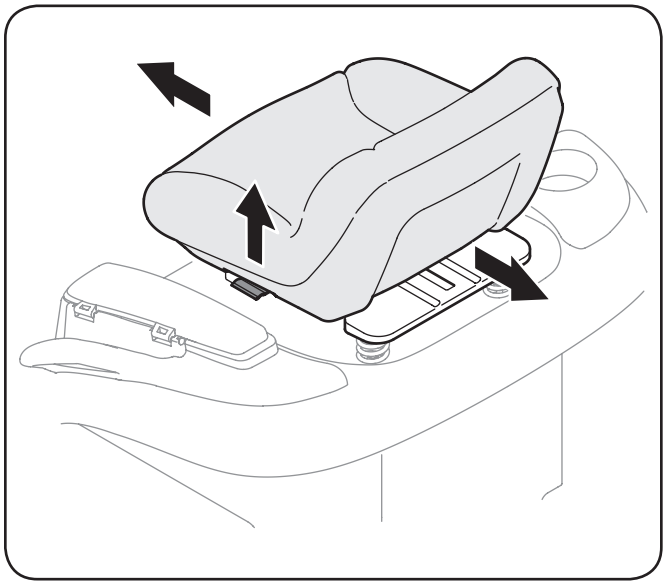

Figure 3-5

WARNING! Before operating the tractor, make sure the seat is engaged in the seat-stop. Engage the parking brake. Stand behind the machine and pull back on seat until it clicks into place.

Gas and Oil

The fuel tank is located under the hood and has a capacity of three and-a-half gallons. Remove the fuel cap by turning it counterclockwise. Use only clean, fresh (no more than 30 days old), unleaded gasoline. Do not overfill the tank.

WARNING! Use extreme care when handling gasoline. Gasoline is extremely flammable and the vapors are explosive. Never fuel the machine indoors or while the engine is hot or running. Extinguish cigarettes, cigars, pipes and other sources of ignition.

NOTE: Your tractor is shipped with oil in the engine. However, you MUST check the oil level before operating.

CAUTION: Always check the engine oil level before each use as instructed in the Kohler Owner's Manual. Add oil as necessary. Failure to do so may result in serious damage to your engine

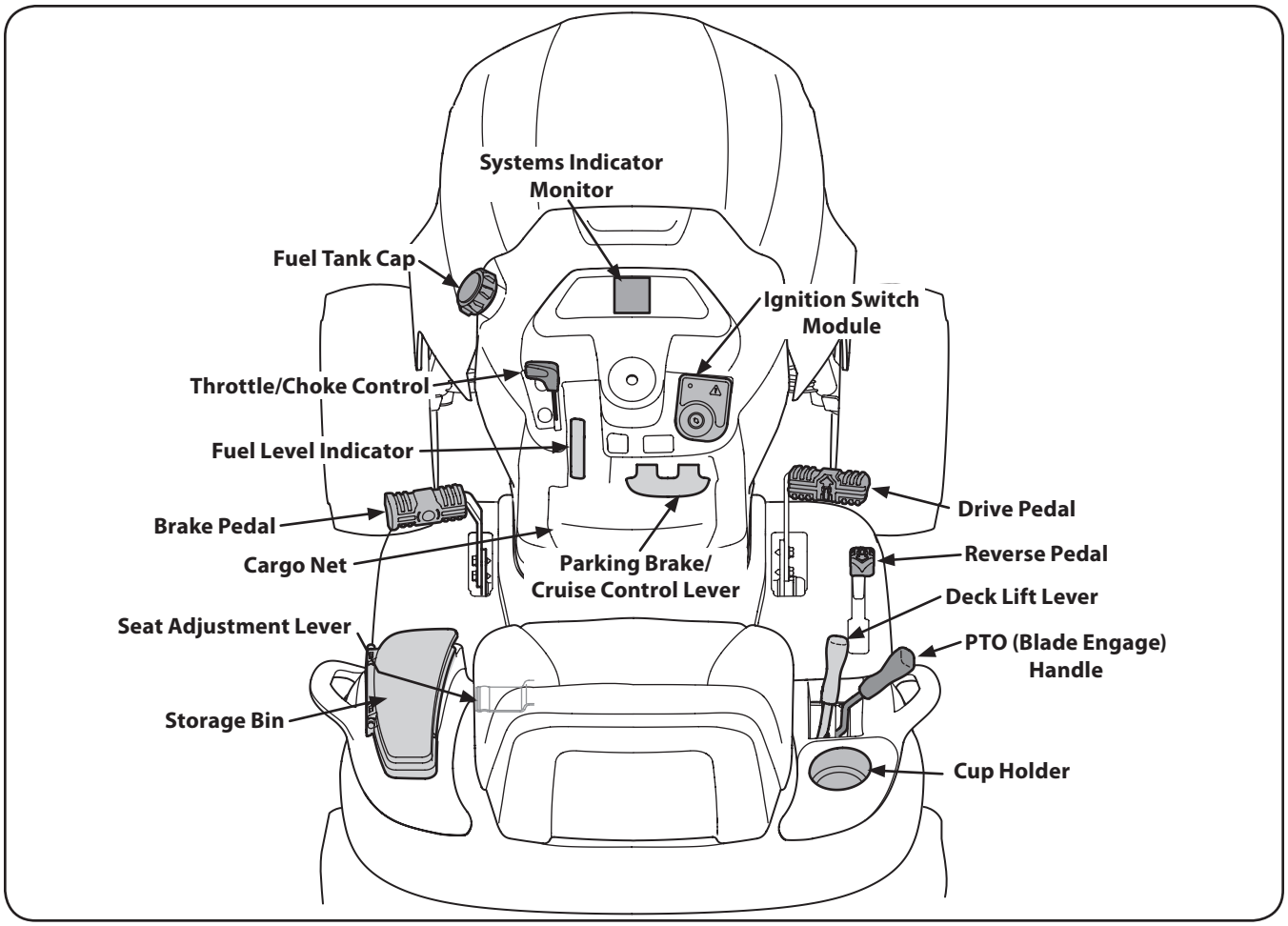

Figure 4-1

Lawn Tractor controls and features are illustrated in Fig. 4-1 and described on the following pages.

WARNING! Read and follow all safety rules and instructions in this manual, including the entire Operation section, before attempting to operate this machine. Failure to comply with all safety rules and instructions may result in personal injury.

Throttle / Choke Control

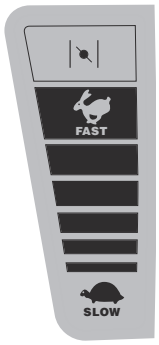

The throttle/choke control is located on the left side of the tractor's dash panel. This lever controls the speed of the engine and, when pushed all the way forward, closes the choke for cold starting. When set in a given position, the throttle will maintain a uniform engine speed.

NOTE: When operating the tractor with the cutting deck engaged, be certain that the throttle/choke control is always in the FAST (rabbit) position.

Brake Pedal

The brake pedal is located on the left front side of the tractor along the running board. The brake pedal can be used for sudden stops or setting the parking brake.

NOTE: The brake pedal must be fully depressed to activate the safety interlock switch when starting the tractor.

Seat Adjustment Lever (Not Seen)

The seat adjustment lever is located below the front/left of the seat. The lever allows for adjustment of the fore to aft position of the operator's seat. Refer to the Assembly and Set-Up section of this manual for more detailed instructions.

Deck Lift Lever

Found on your tractor's right fender, the deck lift lever is used to change the height of the cutting deck. To use, move the lever to the left, then place in the notch best suited for your application.

Ignition Switch Module

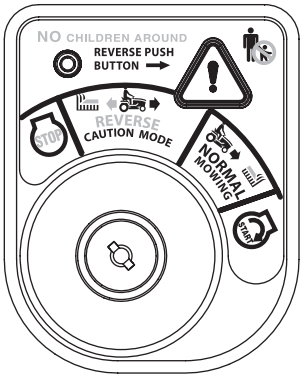

WARNING! Never leave a running machine unattended. Always disengage PTO, set parking brake, stop engine and remove key to prevent unintended starting.

To start the engine, insert the key into the ignition switch and turn clockwise to the START position. Release the key into the NORMAL MOWING MODE position once the engine has fired.

To stop the engine, turn the ignition key counterclockwise to the STOP position.

CAUTION: Prior to operating the tractor, refer to both Safety Interlock Switches and Starting The Engine in the Operation section of this manual for detailed instructions regarding the Ignition Switch Module and operating the tractor in REVERSE CAUTION MODE.

Drive Pedal

The drive pedal is located on the right side of the tractor, along the running board. Press the drive pedal forward to cause the tractor to travel forward. Ground speed is also controlled with the drive pedal. The further forward that the pedal is pivoted, the faster the tractor will travel. The pedal will return to its original position when it's not pressed.

Reverse Pedal

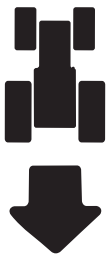

The reverse pedal is located on the right side of the tractor along the running board. Ground speed is also controlled with the reverse pedal. The further downward the pedal is pivoted, the faster the tractor will travel. The pedal will return to its original position when it's not pressed.

Systems Indicator Monitor / Hour Meter LCD

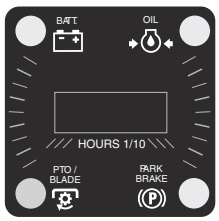

When the ignition key is rotated out of the STOP position but not into the START position, the systems indicator monitor displays the battery's output, in volts, on its LCD for approximately five seconds, after which it displays an hour glass and the hours of tractor operation. Once the tractor is started, the monitor continually displays an hour glass and the hours of tractor operation on its LCD.

NOTE: Hours of tractor operation are recorded any time the ignition key is rotated out of the STOP position, regardless of whether the engine is started.

The Indicator Monitor will also remind the operator of maintenance intervals for changing the engine oil. The LCD will alternately flash the recorded hours, "CHG" and "OIL" for five minutes, after every 50 hours of recorded operation elapse. The maintenance interval lasts for two hours (from 50-52, 100-102, 150-152, etc.). The LCD will also flash as described above for five minutes every time the tractor's engine has been started during this maintenance interval. Before the interval expires, change the engine oil as instructed in the Maintenance section of this Operator's Manual.

Brake

If the Brake light illuminates when attempting to start the tractor's engine, depress the brake pedal.

PTO (Blade Engage)

If the PTO light illuminates when attempting to start the tractor's engine, move PTO lever into the disengaged (OFF) position.

Oil (If Engine So Equipped)

It is normal for the Oil light to illuminate while the engine is cranking during start-up, but if it illuminate's during operation, while the engine is running, stop the tractor immediately and check the engine oil level as instructed in this Owner's Manual.

Battery

It is normal for the Battery light to illuminate while the engine is cranking during start-up, but if it illuminate's during operation, while the engine is running, the battery is in need of a charge or the engine's charging system is not generating sufficient amperage. Charge the battery as instructed in the Service section of this manual or have the charging system checked by your Cub Cadet dealer.

Cargo Net

The cargo net is located on the lower half of the dash and can be used for storage.

Fuel Level Indicator

The Fuel Level Indicator is located on the left side of the tractor's dash and indicates the amount of fuel in the gas tank.

PTO / Blade Engage Handle

Activating the PTO engages power to the cutting deck or other (separately available) attachments. Push forward on the PTO/ Blade Engage handle to activate it. Pull the PTO/ Blade Engage handle back to disengage the power to the cutting deck or other (separately available) attachments.

NOTE: The PTO/Blade Engage handle must be in the disengaged (OFF) position when starting the engine.

Parking Brake/ Cruise Control Lever

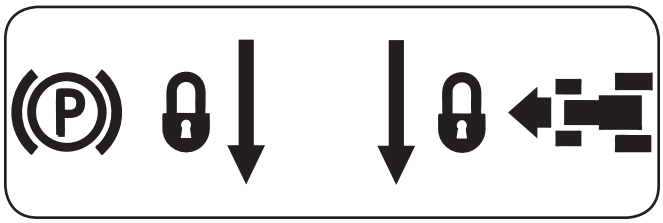

Located in the center of the tractor's dash panel below the steering wheel, the Parking Brake/Cruise Control lever is used to engage the parking brake and the cruise control Refer to the Operation section of this manual for detailed instructions regarding the parking brake.

NOTE: The parking brake must be set if the operator leaves the seat with the engine running or the engine will automatically shut off.

NOTE: Cruise control can NOT be engaged at the tractor's fastest ground speed. If the operator should attempt to do so, the tractor will automatically decelerate to the fastest optimal mowing ground speed.

WARNING! Never leave a running machine unattended. Always disengage PTO, set parking brake, stop engine and remove key to prevent unintended starting.

⚠ WARNING

TO AVOID SERIOUS INJURY OR DEATH

- **GO UP AND DOWN SLOPES, NOT ACROSS.**
- **AVOID SUDDEN TURNS.**
- **DO NOT OPERATE THE UNIT WHERE IT COULD SLIP OR TIP.**
- **IF MACHINE STOPS GOING UPHILL, STOP BLADE(S) AND BACK DOWNHILL SLOWLY.**
- **KEEP SAFETY DEVICES (GUARDS, SHIELDS, AND SWITCHES, ETC.) IN PLACE AND WORKING.**
- **REMOVE OBJECTS THAT COULD BE THROWN BY THE BLADE(S).**
- **KNOW LOCATION AND FUNCTION OF ALL CONTROLS.**
- **BE SURE BLADE(S) AND ENGINE ARE STOPPED BEFORE PLACING HANDS OR FEET NEAR BLADE(S).**
- **BEFORE LEAVING OPERATOR'S POSITION, DISENGAGE BLADE(S), ENGAGE PARKING BRAKE, SHUT OFF AND REMOVE KEY.**

READ OPERATOR'S MANUAL

Safety Interlock Switches

This tractor is equipped with a safety interlock system for the protection of the operator. If the interlock system should ever malfunction, do not operate the tractor. Contact your Cub Cadet dealer.

- The safety interlock system prevents the engine from cranking or starting unless the parking brake is engaged, and the PTO (Blade Engage) knob is in the disengaged (OFF) position.
- The engine will automatically shut off if the operator leaves the seat before engaging the parking brake.

WARNING! Do not operate the tractor if the interlock system is malfunctioning. This system was designed for your safety and protection.

Starting the Engine

NOTE: Refer to the Assembly & Set-Up section of this manual for Gasoline and Oil fill-up instructions.

1. Insert the tractor key into the ignition switch module.
2. Place the PTO (Blade Engage) lever in the disengaged (OFF) position.
3. Engage the tractor's parking brake.
4. Activate the choke control by moving the throttle/choke control all the way forward into the choke position.
5. Turn the ignition key clockwise to the START position. After the engine starts, release the key. It will return to the NORMAL MOWING position.

CAUTION: Do NOT hold the key in the START position for longer than ten seconds at a time. Doing so may cause damage to your engine's electric starter.

6. After the engine starts, deactivate the choke control.

NOTE: Do NOT leave the choke control on while operating the tractor. Doing so will result in a "rich" fuel mixture and cause the engine to run poorly.

Stopping the Engine

WARNING! If you strike a foreign object, stop the engine and disconnect the spark plug wire(s). Thoroughly inspect the machine for any damage. Repair the damage before restarting and operating.

1. If the blades are engaged, place the PTO/Blade Engage lever in the disengaged (OFF) position.
2. Place the throttle control near the SLOW position
3. Turn the ignition key counterclockwise to the STOP position.
4. Remove the key from the ignition switch to prevent unintended starting.

Driving The Tractor

WARNING! Avoid sudden starts, excessive speed and sudden stops.

1. Lightly press the brake pedal to release the parking brake. Move the throttle lever into the FAST (rabbit) position.
2. To travel FORWARD, slowly press the drive pedal forward until the desired speed is achieved. See Fig. 5-1.

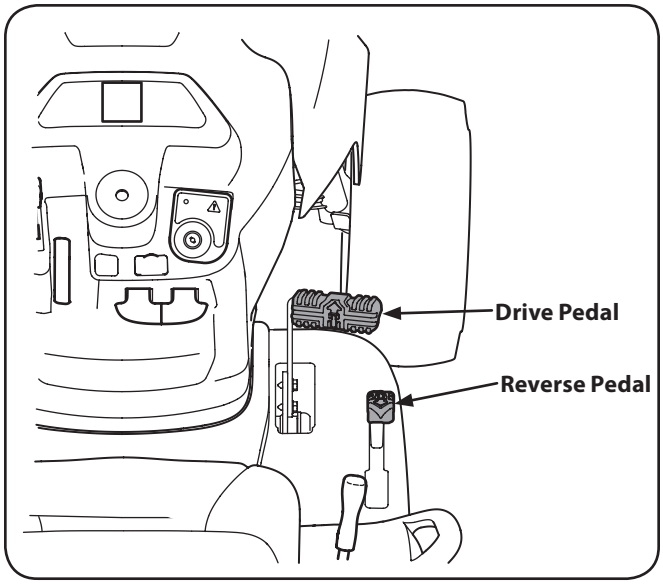

Figure 5-1

3. To travel in REVERSE, check that the area behind is clear then slowly depress the reverse pedal with the ball of your foot (NOT your heel) until the desired speed is achieved. See Fig. 5-1.

CAUTION: Do NOT attempt to change the direction of travel when the tractor is in motion. Always bring the tractor to a complete stop before moving from forward to reverse or vice versa.

WARNING! Do not leave the seat of the tractor without first placing the PTO/Blade Engage lever in the disengaged (OFF) position and engaging the parking brake. If leaving the tractor unattended, also turn the engine off and remove the ignition key.

Reverse Caution Mode

The REVERSE CAUTION MODE position of the key switch module allows the tractor to be operated in reverse with the blades (PTO) engaged.

NOTE: Mowing in reverse is not recommended.

WARNING! Use extreme caution while operating the tractor in the REVERSE CAUTION MODE. Always look down and behind before and while backing. Do not operate the tractor when children or others are around. Stop the tractor immediately if someone enters the area.

To use the REVERSE CAUTION MODE:

NOTE: The operator MUST be seated in the tractor seat.

1. Start the engine as previously instructed on the previous page.
2. Turn the key from the NORMAL MOWING (Green) position to the REVERSE CAUTION MODE (Yellow) position of the key switch module. See Fig. 5-2.

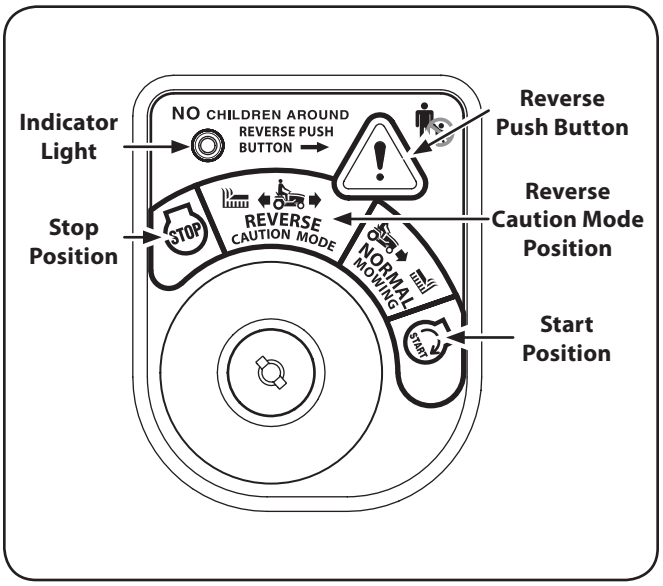

Figure 5-2

3. Press the REVERSE PUSH BUTTON (Orange, Triangular Button) at the top, right corner of the key switch module. The red indicator light at the top, left corner of the key switch module will be ON while activated. See Fig. 5-2.
4. Once activated (indicator light ON), the tractor can be driven in reverse with the cutting blades (PTO) engaged.
5. Always look down and behind before and while backing to make sure no children are around. After resuming forward motion, return the key to the NORMAL MOWING position.

The REVERSE CAUTION MODE will remain activated until:

a. The key is placed in either the NORMAL MOWING position or STOP position or

b. The operator leaves the seat.

Driving On Slopes

Refer to the SLOPE GAUGE on page 7 to help determine slopes where you may operate the tractor safely.

WARNING! Do not mow on inclines with a slope in excess of 15 degrees (a rise of approximately 2-½ feet every 10 feet). The tractor could overturn and cause serious injury.

- Mow up and down slopes, NEVER across.
- Exercise extreme caution when changing direction on slopes.
- Watch for holes, ruts, bumps, rocks, or other hidden objects. Uneven terrain could overturn the machine. Tall grass can hide obstacles.
- Avoid turns when driving on a slope. If a turn must be made, turn down the slope. Turning up a slope greatly increases the chance of a roll over.
- Avoid stopping when driving up a slope. If it is necessary to stop while driving up a slope, start up smoothly and carefully to reduce the possibility of flipping the tractor over backward.

Engaging the Parking Brake/ Setting the Cruise Control

NOTE: The parking break and cruise control are controlled by the same lever. If using the brake, when the parking brake/cruise control lever the parking brake will engage. If using the drive pedal, when the parking brake/cruise control lever the cruise control will engage.

Parking Brake

NOTE: The parking brake must be set if the operator leaves the seat with the engine running or the engine will automatically shut off.

To set the parking brake:

1. Press the brake pedal completely down with your left foot and hold it in that position.
2. Push the parking brake/cruise control lever downward and hold it in that position.
3. Remove your foot from the brake pedal.
4. Release pressure from the parking brake/cruise control lever.

After completing step 3, the brake pedal should remain in the down position. If it doesn't, the parking brake is *not* engaged. Repeat steps 1-4 to engage the parking brake.

To disengage the parking brake, lightly press the brake pedal .

WARNING! Never leave a running machine unattended. Always disengage PTO, set parking brake, stop engine and remove key to prevent unintended starting

Cruise Control

WARNING! Never engage the cruise control lever while traveling in reverse.

To set the cruise control:

1. Slowly press the upper portion of the drive pedal with your right foot until the desired speed is achieved.
2. Lightly press the parking brake/cruise control lever downward and hold it in that position.
3. Remove your foot from the drive pedal.
4. Release pressure from the parking brake/cruise control lever

After completing step 3, the drive pedal should remain in the down position and the tractor will maintain the same forward speed. If it doesn't, the cruise control is *not* engaged. Repeat steps 1-4 to engage the cruise control.

To disengage the cruise control, lightly press the drive pedal or the brake pedal.

NOTE: Cruise control can not be set at the tractor's fastest ground speed. If the operator should attempt to do so, the tractor will automatically decelerate to the fastest optimal mowing ground speed.

To change the direction of travel from forward to reverse when cruise control is engaged, press the brake pedal to disengage the cruise control and bring the tractor to a complete stop. Then slowly press the reverse pedal with the ball of your foot to travel in reverse.

Using the Deck Lift Lever

To raise the cutting deck, move the deck lift lever to the left, then place it in the notch best suited for your application.

Operating the Headlights

The lamps are ON whenever the ignition key is rotated out of the STOP position. The lamps turn OFF when the ignition key is moved to the STOP position.

Engaging the PTO

Engaging the PTO transfers power to the cutting deck or other (separately available) attachments. To engage the PTO:

1. Move the Throttle/Choke control lever to the FAST (rabbit) position.
2. Push the PTO/Blade Engage lever forward into the engaged (ON) position.

NOTE: Always operate the tractor with the Throttle/Choke control lever in the FAST (rabbit) position for the most efficient use of the cutting deck or other (separately available) attachments.

Mowing

WARNING! To help avoid blade contact or a thrown object injury, keep bystanders, helpers, children and pets at least 75 feet from the machine while it is in operation. Stop machine if anyone enters the area.

The following information will be helpful when using the cutting deck with your tractor.

WARNING! Plan your mowing pattern to avoid discharge of materials toward roads, sidewalks, bystanders and the like. Also, avoid discharging material against a wall or obstruction which may cause discharged material to ricochet back toward the operator.

- Do not mow at high ground speed, especially if a mulch kit or grass collector is installed.
- Do not cut the grass too short. Short grass is prone to weed growth and yellows quickly in dry weather.
- Always operate the tractor with the throttle lever in the FAST (rabbit) position while mowing.
- For best results it is recommended that the first two laps be cut with the discharge thrown towards the center. After the first two laps, reverse the direction to throw the discharge to the outside for the balance of cutting. This will give a better appearance to the lawn.
- Do NOT attempt to mow heavy brush and weeds or extremely tall grass. Your tractor is designed to mow lawns, NOT clear brush.
- Keep the blades sharp and replace the blades when worn.

Maintenance Schedule

	Before Each use	Every 10 Hours	Every 25 Hours	Every 50 Hours	Every 100 Hours	Prior to Storing
Clean Hood/Dash Louvers		✓				✓
Check Engine Oil Level	✓					
Check Air Filter for Dirty, Loose or Damaged Parts	✓					
Clean and Re-oil Air Filter's Foam Precleaner			✓			
Replace Air Filter Element					✓	
Change Engine Oil and Replace Oil Filter				✓		
Clean Battery Terminals		✓				✓
Lube Front Axles and Rims			✓			✓
Clean Engine Cooling Fins			✓			✓
Lube Front Deck Wheels			✓			✓
Lube Deck Spindles			✓			✓
Lube Pedal Pivot Points		✓				✓
Check Spark Plug Condition & Gap					✓	✓
Replace Fuel Filter					✓	

Maintenance

WARNING! Before performing any maintenance or repairs, disengage PTO, set parking brake, stop engine and remove key to prevent unintended starting.

Engine

Refer to the Kohler Owner's Manual for all engine maintenance procedures and instructions.

NOTE: Maintenance, repair, or replacement of the emission control devices and systems which are being done at owner's expense may be performed by any engine repair establishment or individual. **Warranty repairs must be performed by a Cub Cadet Dealer**.

Changing the Engine Oil

WARNING! If the engine has been recently run, the engine, muffler and surrounding metal surfaces will be hot and can cause burns to the skin. Exercise caution to avoid burns.

NOTE: The oil filter should be changed at every oil change interval. To complete an oil change, proceed as follows:

1. Run the engine for a few minutes to allow the oil in the crankcase to warm up. Warm oil will flow more freely and carry away more of the engine sediment which may have settled at the bottom of the crankcase. Use care to avoid burns from hot oil.
2. Open the tractor's hood and locate the oil drain port on the left side of the engine.

3. Pop open the protective cap on the end of the oil drain valve to expose the drain port. See Fig 6-1.

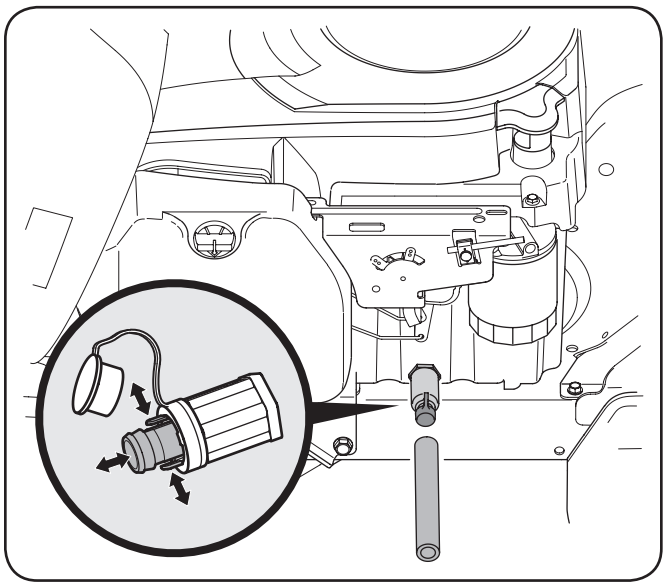

Figure 6-1

4. Remove the oil fill cap/ dipstick from the oil fill tube.
5. Push the oil drain hose (packed with this manual) onto the oil drain port. Route the opposite end of the hose into an appropriate oil collection container with at least a 2.5 quart capacity, to collect the used oil.
6. Pinch the tabs on the oil drain valve, then pull outward to begin draining oil. See Fig 6-1.
7. After the oil has finished draining, push the end of the oil drain valve back in, until the tabs click into place. Re-cap the end of the oil drain valve to keep debris from entering the drain port.
8. Replace the oil filter as instructed in the Kohler Owner's Manual.
9. Refill the engine with new oil. Refer to the Kohler Owner's Manual for information regarding the volume and weight of engine oil

Air Cleaner

Service the pre-cleaner and cartridge/air cleaner element as instructed in the Kohler Owner's Manual.

Spark Plug

The spark plug should be cleaned and the gap reset once a season. Refer to the Kohler Owner's Manual for correct plug type and gap specifications.

Hydrostatic Transmission

The hydrostatic transmission is sealed at the factory and is maintenance-free. The fluid level cannot be checked and the fluid cannot be changed.

Battery

CALIFORNIA PROPOSITION 65 WARNING! Battery posts, terminals, and related accessories contain lead and lead compounds, chemicals known to the State of California to cause cancer and reproductive harm. Wash hands after handling.

The battery is sealed and is maintenance-free. Acid levels cannot be checked and fluid can not be added.

- Always keep the battery cables and terminals clean and free of corrosive build-up.
- After cleaning the battery and terminals, apply a light coat of petroleum jelly or grease to both terminals.

CAUTION: If removing the battery for cleaning, disconnect the NEGATIVE (Black) wire from it's terminal first, followed by the POSITIVE (Red) wire. When re-installing the battery, always connect the POSITIVE (Red) wire its terminal first, followed by the NEGATIVE (Black) wire. Be certain that the wires are connected to the correct terminals; reversing them could result in serious damage to your engine's alternating system.

Cleaning the Tractor

Any fuel or oil spilled on the machine should be wiped off promptly. Do NOT allow debris to accumulate around the cooling fins of the engine, the transmission's cooling fan or on any other part of the machine, especially the belts and pulleys.

Smart Jet™

Your tractor's deck is equipped with a water port on its surface as part of its deck wash system.

Use the Smart Jet™ to rinse grass clippings from the deck's underside and prevent the buildup of corrosive chemicals. Complete the following steps AFTER EACH MOWING:

1. Drive the tractor to a level, clear spot on your lawn, near enough for your garden hose to reach.

CAUTION: Make certain the tractor's discharge chute is directed AWAY from your house, garage, parked cars, etc.

2. Disengage the PTO (Blade Engage), set the parking brake and stop the engine.
3. Thread the hose coupler (packaged with your tractor's Operator's Manual) onto the end of your garden hose.

4. Attach the hose coupler to the water port on your decks surface. See Fig. 6-2.

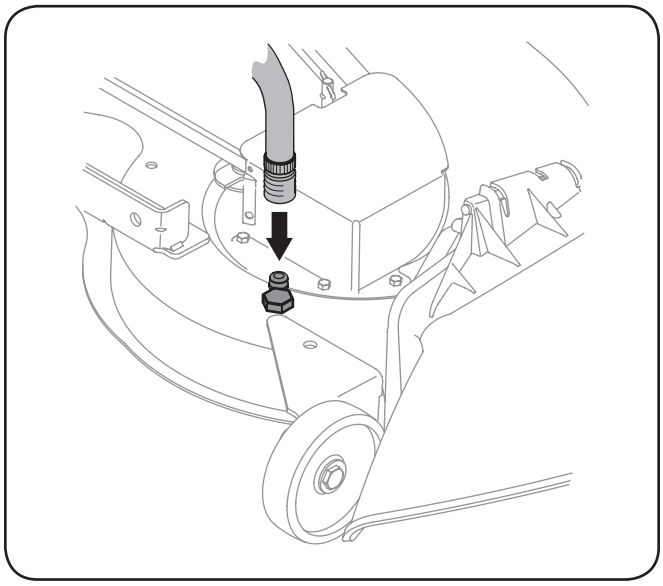

Figure 6-2

5. Turn the water on.
6. While sitting in the operator's position on the tractor, start the engine and place the throttle lever in the FAST (rabbit) position.
7. Move the tractor's PTO (Blade Engage) into the ON position.
8. Remain in the operator's position with the cutting deck engaged for a minimum of two minutes, allowing the underside of the cutting deck to thoroughly rinse.
9. Move the tractor's PTO (Blade Engage) into the OFF position.
10. Turn the ignition key to the STOP position to turn the tractor's engine off.
11. Turn the water off and detach the hose coupler from the water port on your deck's surface.

After cleaning your deck with the Smart Jet™ system, return to the operator's position and engage the PTO. Keep the cutting deck running for a minimum of two minutes, allowing the underside of the cutting deck to thoroughly dry.

Lubrication

WARNING! Before lubricating, repairing, or inspecting, always disengage PTO, set parking brake, stop engine and remove key to prevent unintended starting.

Front Wheels

Each of the front wheel axles and rims is equipped with a grease fitting. See Fig. 6-3. Lubricate with a No. 2 multi-purpose grease applied with a grease gun after every 25 hours of tractor operation.

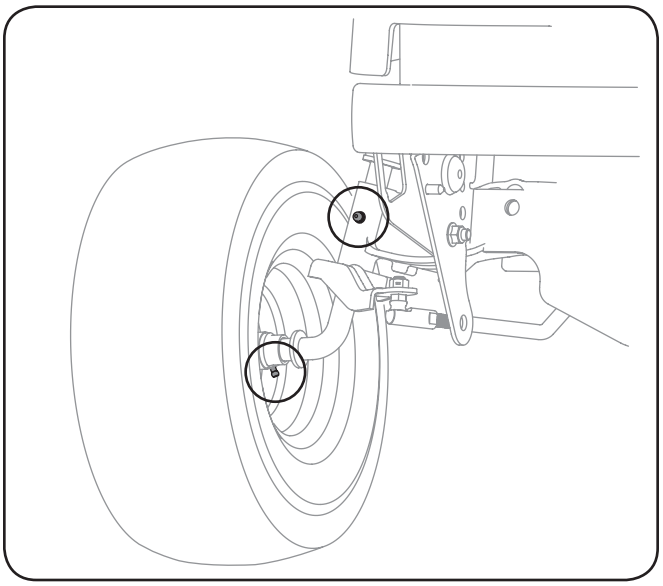

Figure 6-3

Pivot Points & Linkage

Lubricate all the pivot points on the drive system, parking brake and lift linkage at least once a season with light oil.

Deck Wheels

Each of the tractor deck's front gauge wheels is equipped with a grease fitting. Lubricate with a No. 2 multi-purpose grease applied with a grease gun after every 25 hours of tractor operation

Adjustments

WARNING! Shut the engine off, remove the ignition key and engage the parking brake before making adjustments. Protect your hands by using heavy gloves when handling the blades.

NOTE: Check the tractor's tire pressure before performing any deck leveling adjustments. Refer to Tires on page 25 for information regarding tire pressure.

Leveling the Deck (Front To Rear)

The front of the cutting deck is supported by a stabilizer bar that can be adjusted to level the deck from front to rear. The front of the deck should be between ¼-inch and ⅜-inch lower than the rear of the deck. Adjust if necessary as follows:

1. Park the tractor parked on a firm, level surface and place the deck lift lever in the middle position.
2. Rotate the blade nearest the discharge chute so that it is parallel with the tractor.
3. Measure the distance from the front of the blade tip to the ground and the rear of the blade tip to the ground. The first measurement taken should be between ¼" and ⅜" less than the second measurement.

Determine the approximate distance necessary for proper adjustment and proceed, if necessary.

1. Loosen (thread outward) the hex lock nut on the end of the deck hanger rod. See Fig. 6-4.

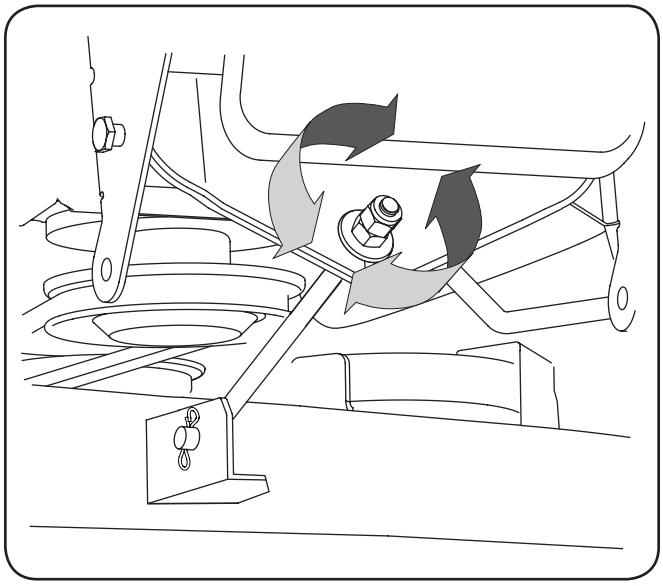

Figure 6-4

2. To *raise* the front of the deck, tighten (thread inward) the inner hex nut against the front hanger bracket.
3. To *lower* the front of the deck, loosen (thread outward) the hex nut, away from the front hanger bracket. See Fig. 6-4.
4. Retighten the lock nut against each hex nut when proper adjustment is achieved.

Leveling the Deck (Side to Side)

If the cutting deck appears to be mowing unevenly, a side to side adjustment can be performed. Adjust if necessary as follows:

1. With the tractor parked on a firm, level surface, place the deck lift lever in the middle position and rotate both blades so that they are perpendicular with the tractor.
2. Measure the distance from the outside of the left blade tip to the ground and the distance from the outside of the right blade tip to the ground. Both measurements taken should be equal. If they're not, proceed to the next step.
3. Loosen, but do NOT remove, the hex bolt on the left deck hanger bracket. See Fig. 6-5.

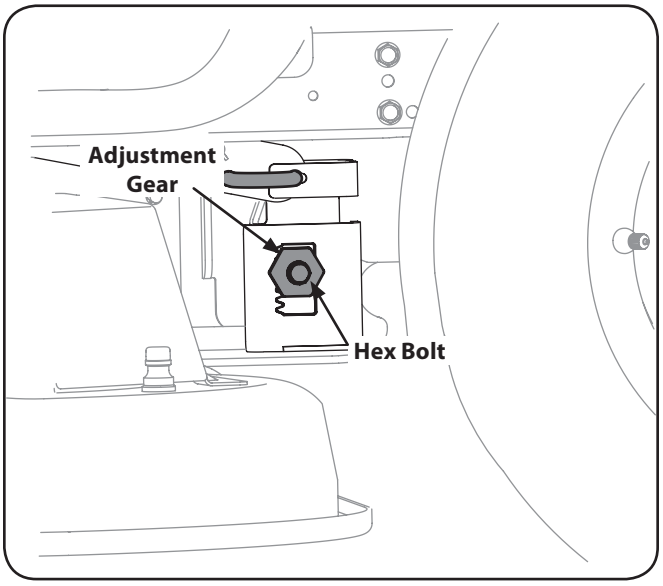

Figure 6-5

4. Using a wrench, raise or lower the left side of the deck by turning the adjustment gear. See Fig. 6-5.

The deck is properly leveled when both blade tip measurements taken earlier are equal. Retighten the hex bolt on the left deck hanger bracket when proper adjustment is achieved.

Parking Brake Adjustment

If the tractor does not come to a complete stop when the brake pedal is completely depressed, or if the tractor's rear wheels can roll with the parking brake applied (and the transmission relief valve open), the brake is in need of adjustment. See your Cub Cadet dealer to have the brake properly adjusted.

Adjusting the Seat

Refer to the Set-Up and Assembly section of this manual for seat adjustment instructions.

WARNING! Before operating the tractor, make sure the seat is engaged in the seat-stop. Engage the parking brake. Stand behind the machine and pull back on seat until it clicks into place.

Steering Adjustment

If the tractor turns tighter in one direction than the other, or if the ball joints are being replaced due to damage or wear, the steering drag links may need to be adjusted.

Adjust the drag links so that equal lengths of each are threaded into the ball joint on the left side and the ball joint on the right side:

1. Remove the hex nut on the top of ball joint. See Fig. 6-6.

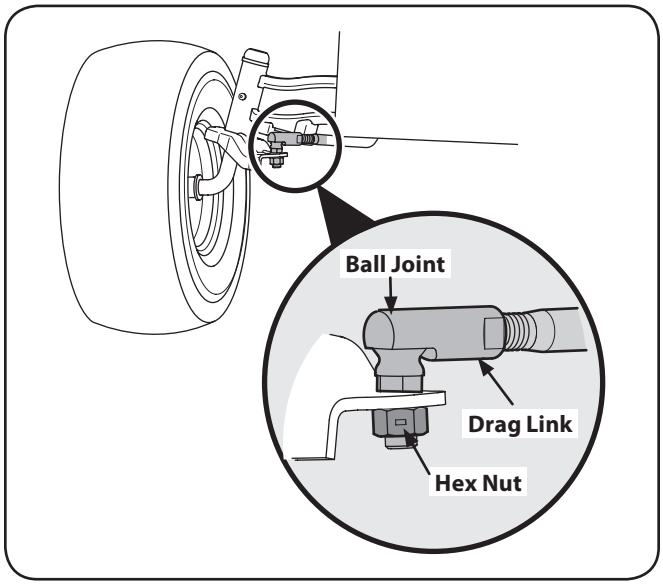

Figure 6-6

2. Thread the ball joint inward to shorten the drag link. Thread the ball joint outward to lengthen the drag link.
3. Replace the hex nut after proper adjustment is achieved.

   NOTE: Threading the ball joints too far onto the drag links will cause the front tires to "toe-in" too far. Proper toe-in is between 1⁄16" and 5⁄16".
4. Front tire toe-in can be measured as follows:
   a. Place the steering wheel in position for straight ahead travel.
   b. In front of the axle, measure the distance horizontally from the inside of the left rim to the inside of the right rim. Note the distance.
   c. Behind the axle, measure the distance horizontally from the inside of the left rim to the inside of the right rim. Note the distance.
5. The measurement taken in front of the axle should be between 1⁄16" and 5⁄16" less than the measurement taken behind the axle.

Cutting Deck Removal

To remove the cutting deck, proceed as follows:

Disengage the PTO (Blade Engage) and engage the parking brake.

1. Place the deck gauge wheels in their highest setting (lowest deck setting).
2. Lower the deck by moving the deck lift lever into the bottom notch on the right fender.
3. Looking at the cutting deck from the left side of the tractor, locate the deck support pin on the rear left side of the deck. Refer to Fig. 7-1.

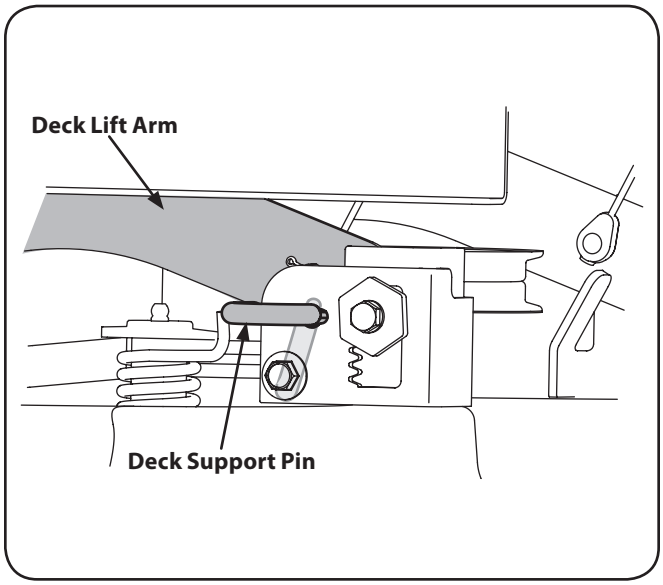

Figure 7-1

4. Pull the deck support pin outward to release the deck from the deck lift arm. Pivot the support pin handle downward to lock the pin in the disengaged position. Refer to Fig. 7-1.
5. Move to the right side of the tractor and repeat the previous step to release the deck from the RH lift arm. Fig. 7-1
6. Move the deck lift lever into the top notch on the right fender to raise deck lift arms up and out of the way.
7. Remove the cotter pin from the end of the stabilizer rod and slide the stabilizer out of the hanger bracket on the deck. See Fig. 7-2.

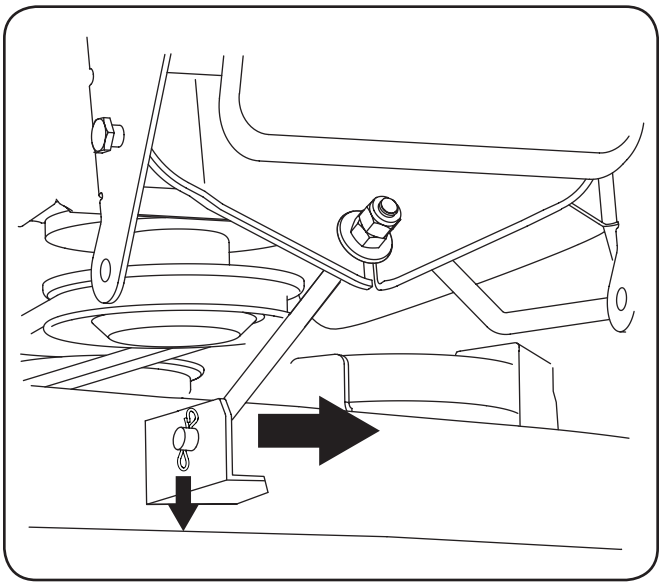

Figure 7-2

8. The PTO belt is captured inside the PTO pulley on the bottom of the engine by a belt keeper. From beneath the front/left side of the tractor, locate the hex tapping screw securing the left side of the belt keeper to the bottom of the tractor frame. After first noting the frame hole into which the right side of the belt keeper is inserted, remove the hex tapping screw and belt keeper. Slide the PTO belt off the tractor's PTO pulley.
9. While holding the front deck hanger rod upward to clear the deck front hanger bracket, carefully slide the deck out from the right side of the tractor.

Cutting Blades

WARNING! Be sure to shut the engine off, remove ignition key, disconnect the spark plug wire(s) to prevent unintended starting before removing the cutting blade(s) for sharpening or replacement. Protect your hands by using heavy gloves or a rag to grasp the cutting blade.

The blades may be removed as follows.

1. Remove the deck from beneath the tractor, (refer to Cutting Deck Removal) then gently flip the deck over to expose its underside.

   NOTE: A block of wood may be placed between the deck housing and the cutting edge of the blade to help in breaking loose the hex nut securing the blade.

2. Use a 15⁄16" wrench to loosen the hex flange nut securing the blade to the bottom of the spindle assembly. Secure the spindle by either holding the blade tightly, or by using a second wrench to hold the nut at the top of the spindle.

3. Continue holding the blade onto the star hub of the spindle, and remove the flange nut and cutting blade.
4. Repeat the previous steps to remove the other blade.
5. To properly sharpen the cutting blades, remove equal amounts of metal from both ends of the blades along the cutting edges, parallel to the trailing edge, at a 25° to 30° angle.

   NOTE: If the cutting edge of the blade has already been sharpened to within 1-⅝" from the edge, or if any metal separation is present, replace the blades with new ones.

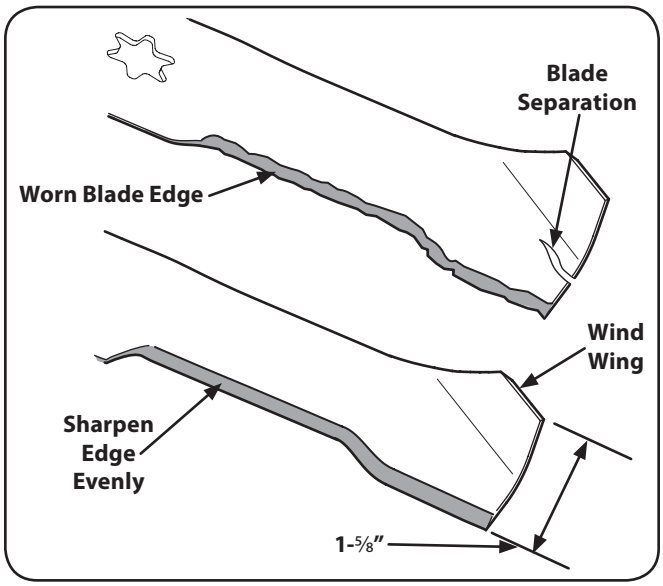

Figure 7-3

See Figure 7-3.

6. It is important that each cutting blade edge be ground equally to maintain proper blade balance.
7. A poorly balanced blade will cause excessive vibration and may cause damage to the tractor and result in personal injury. The blade can be tested by balancing it on a round shaft screwdriver. Grind metal from the heavy side until it balances evenly.

   NOTE: When replacing the blades, make certain the side of the blade marked ''Bottom'' faces the ground when the mower is turned to the operating position.

   NOTE: Note that the stars of the blades (and spindles) are not symmetrical. The blade can be installed on each spindle in only one direction. Carefully align the star hole of the blade with the star of the spindle shaft when installing each blade. DO NOT improperly align the blade and spindle shaft, and attempt to seat the blade onto the spindle by tightening the hex flange nut.
8. Rotate the blade as necessary to align its star hole with the star of the spindle shaft, then slide the blade onto the spindle shaft. Thread the hex flange onto the spindle shaft and use a torque wrench to tighten the hex flange nut to 70 to 90 foot-pounds.
9. Repeat the above procedure to install the other blade.

Changing the PTO Belt

WARNING! Be sure to shut the engine off, remove ignition key, disconnect the spark plug wire(s) to prevent unintended starting before removing the belt(s).

All belts on your tractor are subject to wear and should be replaced if any signs of wear are present.

NOTE: Do not use substitute belts. The V-belt found on your tractor is specially designed for optimal performance and service life for your deck application. Use only OEM original replacement belts.

To replace the PTO belt, proceed as follows:

1. Remove the deck from beneath the tractor (refer to Cutting Deck Removal).
2. Maneuver the PTO belt downward and off the idler pulley on the spring loaded idler bracket.

   NOTE: It may be necessary to loosen the hex cap screw and flange lock nut securing the pulley to the idler bracket to fit the belt between the pulley and bracket.
3. Slide the belt between the bottom of the idler pulley and top of the timing belt idler pulley below. See Fig. 7-4.

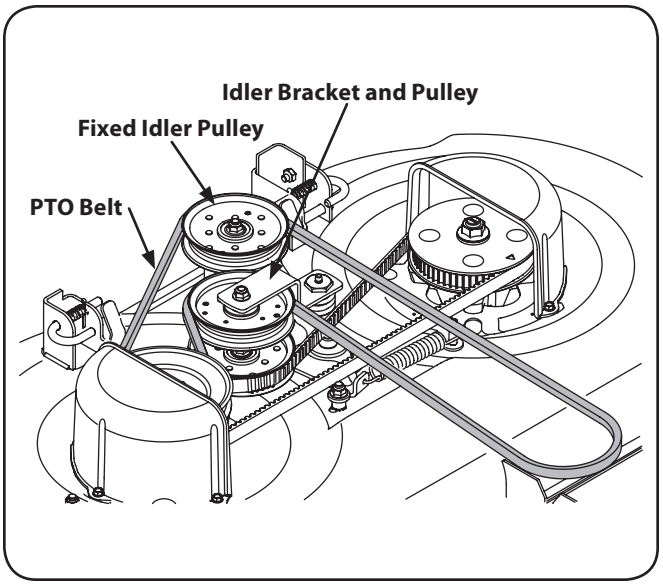

Figure 7-4

4. Loop the belt and push out of the V- groove of the drive pulley on the right hand spindle assembly. Lift the belt over the pulley and out from beneath the spindle cover. See Fig. 7-4.
5. Loop the new PTO belt and slide between the top of the drive pulley and spindle cover. Maneuver the belt around and into the V-groove of the drive pulley.
6. Route the back side of the belt around idler pulley and between the idler pulley and idler bracket. Re-tighten the hex screw and flange lock nut if loosened earlier. Refer to Fig. 7-4.
7. Route the belt around the fixed idler pulley as shown in Fig. 7-4 and re-install the deck as described in "Reinstalling the Cutting Deck" later in this section.

Changing the Timing Belt

WARNING! Be sure to shut the engine off, remove ignition key, disconnect the spark plug wire(s) to prevent unintended starting before removing the belt(s).

To replace the timing belt, proceed as follows:

1. Remove the deck from beneath the tractor (refer to Cutting Deck Removal).
2. Remove the PTO belt drive pulley of the right hand spindle assembly as described in "Changing the PTO Belt."
3. Remove the hex screw, flat washer, lock washer, shoulder spacer, and flange lock nut that make up the idler bracket backstop. See Fig. 7-5.

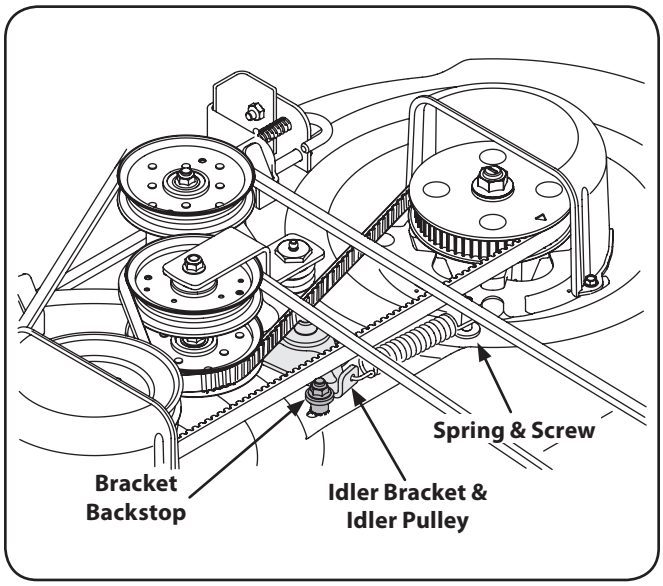

Figure 7-5

NOTE: It may be necessary to clean the underside of the mowing deck to access the hex screw. Refer to Fig. 7-5.

4. Applying force to either the timing belt idler pulley or the timing belt idler bracket, pivot and hold the idler bracket against the spring tension just far enough to allow lifting the timing belt off and above the idler pulley. Carefully release the idler bracket. See Fig. 7-5.
5. Loop the timing belt and lift out of the timing pulley and over the right hand spindle assembly. Maneuver the belt between the drive pulley on top of the spindle assembly and the spindle cover to remove.
6. Repeat the above procedure to remove the belt from the left hand spindle assembly timing pulley. Refer to Fig. 7-5.
7. Loop the new timing belt and maneuver the belt between the drive pulley on top of the right hand spindle assembly and the spindle cover. Lower the belt until loosely around the right hand timing pulley. Refer to Figure 7-5.
8. Note the arrows on the top of the timing pulley on the LH spindle and on the drive pulley of the RH spindle assembly. These timing arrows MUST be positioned 90° from each other as shown in Fig. 7-6.

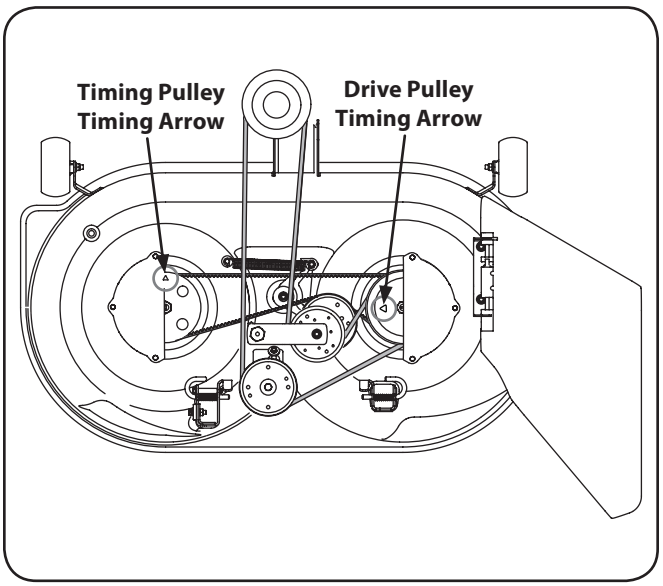

Figure 7-6

9. Rotate the RH spindle assembly to position the drive pulley timing arrow as shown in Fig. 7-6. Then without moving the RH drive pulley, pull the timing belt tight against the RH timing pulley, above the timing belt idler pulley, and over to the LH timing pulley.
10. Turn the LH timing pulley so that its timing arrow is 90° from the RH spindle assembly timing arrow. Refer to Fig. 7-6.
11. While making sure not to change the position of either pulley, loop the timing belt over the LH timing pulley.
12. After making sure the spring is hooked onto the idler bracket and screw, pivot the timing idler bracket/idler pulley against the spring tension just far enough to allow you to lower the backside of the timing belt onto the idler pulley. See Fig. 7-6.
13. Re-check the timing arrows on the two pulleys. If they have moved from the 90º position when tensioning the timing belt, pivot the idler pulley to relieve tension on the belt and re-position the pulleys. The timing arrows MUST be positioned 90° from each other as shown in Fig. 7-6.
14. Re-install the idler bracket backstop components as originally installed in the deck housing, and position so that there is a ⅛" gap between the backstop and idler bracket. Tighten the hex screw and flange lock nut to secure in the adjusted position.

15. If the timing belt was installed correctly and the timing arrows were positioned as shown in Fig. 7-6, the cutting blades should be in the position shown in Fig. 7-7.

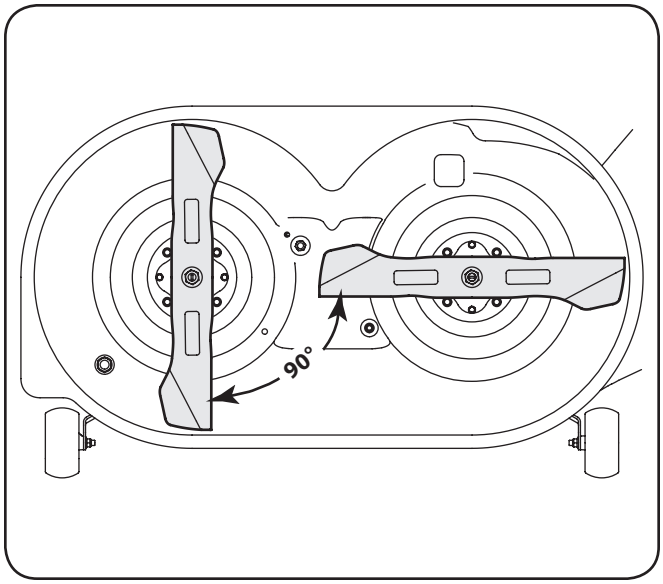

Figure 7-7

16. Reinstall the PTO belt onto the RH spindle drive pulley and re-install the deck as described in "Re-installing the Cutting Deck" below.

Reinstalling the Cutting Deck

There are two methods for reinstalling the mower deck on the tractor. One method involves rotating the PTO belt idler bracket to relieve enough belt tension to allow the belt to be placed in either the PTO pulley or the fixed idler pulley. Because that method is difficult, we recommend using the second method of rolling the belt onto the PTO pulley.

Install the cutting deck as follows:

1. From the right side of the tractor, slide the deck under the tractor and align the rear deck hanger brackets with the deck lift arms.
2. Slide the deck forward and place the deck front hanger rod into the slots of the deck front hanger bracket. Then slide the deck rearward so that the front hanger rod is at the front of the slots.
3. Using the deck lift lever, lower the deck lift arms. From either side of the tractor, pull the support pin in the deck rear hanger bracket outward, align the deck lift arm hole with the deck support pin and release the pin so that it goes through the deck lift arm. Repeat on the other side of the tractor to secure the deck.
4. After first making sure the deck belt is properly engaged in all of the deck pulleys, route the deck belt forward through the center of the front deck hanger rod and toward the PTO pulley on the bottom of the engine.
5. Using the deck lift handle, raise the deck to the position that gives you the most horizontal run of the belt between the deck pulleys and the PTO pulley on the bottom of the engine.
6. Sitting in front of the tractor, facing rearward, make certain the belt is not twisted; then reach beneath the tractor to grasp the belt and pull it toward the PTO pulley.

   NOTE: References to left and right are from the front of the tractor in the following instructions.
7. Pull the right side of the belt forward and place the narrow V side of the belt into the PTO pulley.
8. While holding the belt and pulley together, rotate the pulley to the left. Continue holding and rotating the pulley and belt until the belt is fully rolled into the PTO pulley. See Fig. 7-8.

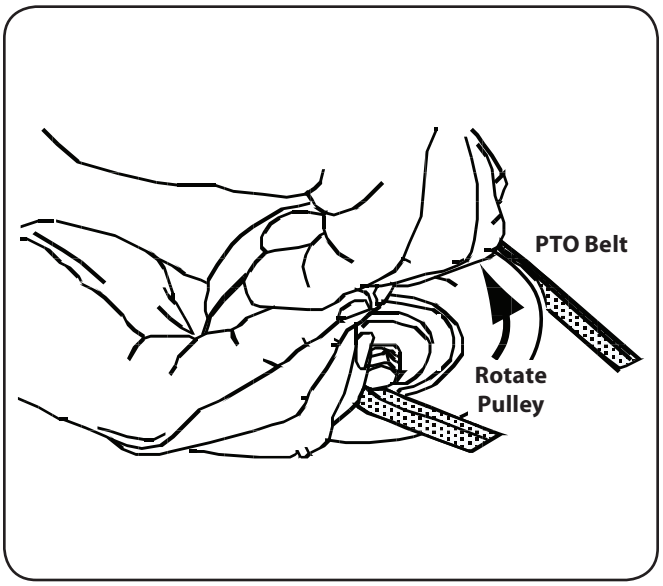

Figure 7-8

WARNING! Use caution to prevent pinching your fingers when rolling the belt onto the PTO pulley.

Checking the Cutting Blade Timing

During normal operation the timing of the cutting blades can be altered by abnormal loads on one, or both, cutting blades. Regularly check the timing arrows on the spindle assemblies to make certain they are 90° from each other.

If the timing arrows are not 90° from each other, proceed as follows:

1. Remove the deck from the tractor. Remove the idler bracket backstop. Refer to Figure 7-5.
2. Pivot the idler bracket/idler pulley to relieve the tension on the timing belt, and reposition the drive pulley and/or timing pulley to achieve the 90° orientation of the timing arrows.
3. Re-install the idler bracket backstop and position so that there is a ⅛" gap between the backstop and idler bracket. Tighten the hex screw and flange lock nut to secure in the adjusted position.

Battery

CALIFORNIA PROPOSITION 65 WARNING! Battery posts, terminals, and related accessories contain lead and lead compounds, chemicals known to the State of California to cause cancer and reproductive harm. Wash hands after handling.

CAUTION: If removing the battery, disconnect the NEGATIVE (Black) wire from it's terminal first, followed by the POSITIVE (Red) wire. When re-installing the battery, always connect the POSITIVE (Red) wire its terminal first, followed by the NEGATIVE (Black) wire.

Jump Starting

WARNING! Never jump start a damaged or frozen battery. Be certain the vehicles do not touch, and ignitions are off. Do not allow cable clamps to touch.

1. Connect positive (+) cable to positive post (+) of your tractor's discharged battery.
2. Connect the other end of the cable to the (positive +) post of the jumper battery.
3. Connect the second cable (negative –) to the other post of the jumper battery.
4. Make the final connection on the engine block of the tractor, away from the battery. Attach to a unpainted part to assure a good connection.

CAUTION: If the jumper battery is installed on a vehicle (i.e. car, truck), do NOT start the vehicle's engine when jump starting your tractor.

5. Start the tractor (as instructed in the Operation section of this manual).
6. Set the tractor's parking brake before removing the jumper cables, in reverse order of connection.

Charging

WARNING! Batteries give off an explosive gas while charging. Charge the battery in a well ventilated area and keep away from an open flame or pilot light as on a water heater, space heater, furnace, clothes dryer or other gas appliances.

CAUTION: When charging your tractor's battery, use only a charger designed for 12V lead-acid batteries. Read your battery charger's Owner's Manual prior to charging your tractor's battery. Always follow its instructions and heed its warnings.

If your tractor has not been put into use for an extended period of time, charge the battery as follows:

1. Set your battery charger to deliver a max of 10 amperes.
2. If your battery charger is automatic, charge the battery until the charger indicates that charging is complete. If the charger is not automatic, charge for no fewer than eight hours.

Fuse

WARNING! Before servicing, repairing, or inspecting, always disengage PTO, set parking brake, stop engine and remove key to prevent unintended starting.

A 20 Amp fuse is installed in your tractor's wiring harness to protect the tractor's electrical system from damage caused by excessive amperage.

If the electrical system does not function, or your tractor's engine will not crank, first check to be certain that the fuse has not blown. It is located under the hood, mounted behind the top of the dash panel on the support bar.

CAUTION: Always use a replacement fuse with the same amperage capacity as the blown fuse.

Tires

WARNING! Never exceed the maximum inflation pressure shown on the sidewall of the tire.

Refer to the tire sidewall for exact tire manufacturer's recommended or maximum psi. Do not overinflate.

Uneven tire pressure could cause the cutting deck to mow unevenly.

Changing the Transmission Drive Belt

Several components must be removed and special tools used in order to change the tractor's transmission drive belt. See your Cub Cadet dealer to have the transmission drive belt replaced

Troubleshooting

8

Problem	Cause	Remedy
Engine fails to start	1. PTO/Blade Engage lever engaged. 2. Parking brake not engaged. 3. Spark plug wire disconnected. 4. Throttle/Choke control lever not in correct starting position. 5. Fuel tank empty, or stale fuel. 6. Blocked fuel line. 7. Faulty spark plug. 8. Engine flooded.	1. Place lever in disengaged (OFF) position. 2. Engage parking brake. 3. Connect wire to spark plug. 4. Place Throttle/Choke lever to FAST position. 5. Fill tank with clean, fresh (less than 30 days old) gas. 6. Clean fuel line and replace fuel filter. 7. Clean, adjust gap or replace plug. 8. Crank engine with throttle in FAST position.
Engine runs erratic	1. Tractor running with Throttle/Choke activated. 2. Spark plug wires loose. 3. Blocked fuel line or stale fuel. 4. Vent in gas cap plugged. 5. Water or dirt in fuel system. 6. Dirty air cleaner.	1. Push Throttle/Choke control in. 2. Connect and tighten spark plug wires. 3. Clean fuel line; fill tank with clean, fresh gasoline and replace fuel filter. 4. Clear vent or replace cap if damaged. 5. Drain fuel tank. Refill with clean, fresh gasoline. 6. Replace air cleaner paper element or clean foam precleaner.
Engine overheats	1. Engine oil level low. 2. Air flow restricted.	1. Fill crankcase with proper amount and weight of oil. 2. Clean grass clippings and debris from around the engine's cooling fins and blower housing.
Engine hesitates at high RPM	1. Spark plug gap too close.	1. Remove spark plug and reset the gap.
Engine Idles rough	1. Spark plug fouled, faulty or gap too wide. 2. Dirty air cleaner.	1. Replace spark plug. Set plug gap. 2. Replace air cleaner element and/or clean pre-cleaner.
Excessive vibration	1. Cutting blade loose or unbalanced. 2. Damaged or bent cutting blade.	1. Tighten blade and spindle. 2. Replace blade.
Mower will not mulch grass	1. Engine speed too low. 2. Wet grass. 3. Excessively high grass. 4. Dull blade.	1. Place Throttle/Choke control in FAST (rabbit) position. 2. Do not mulch when grass is wet. 3. Mow once at a high cutting height, then mow again at desired height or make a narrower cutting swath. 4. Sharpen or replace blade.
Uneven cut	1. Deck not leveled properly. 2. Dull blade. 3. Uneven tire pressure.	1. Perform side-to-side deck adjustment. 2. Sharpen or replace blade. 3. Check tire pressure in all four tires.

Component	Part Number and Description
	759-3336 Spark Plug (Champion RC12YC)
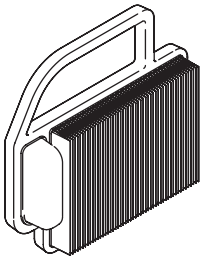	KH-20-883-02-S Air Filter Element
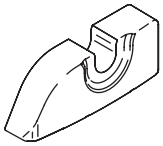	KH-20-083-03-S Precleaner Element
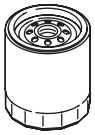	KH-52-050-02-S Oil Filter
	KH-25-050-22-S1 Fuel Filter
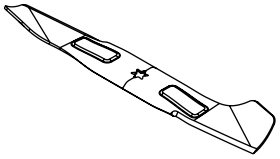	942-04217 2-in-1 Timing Deck Blade
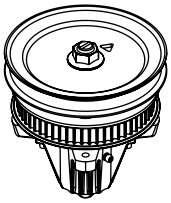	918-04512A Drive Spindle Assembly
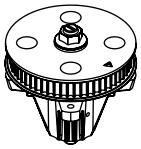	918-04516 Driven Spindle Assembly

Phone (800) 965-4CUB to order replacement parts or a complete Parts Manual (have your full model number and serial number ready). Parts Manual downloads are also available free of charge at www.cubcadet.com.

Component	Part Number and Description	
	734-04155	Deck Wheel (Front)
	734-0973	Deck Wheel (Rear)
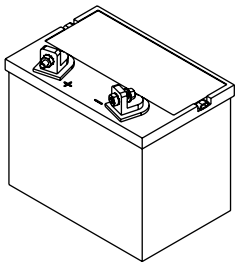	925-1707D	Battery
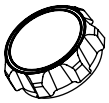	951-3111	Fuel Tank Cap
	746-1084	Throttle/Choke Control and Cable
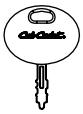	725-2054A	Ignition Key (Plastic)
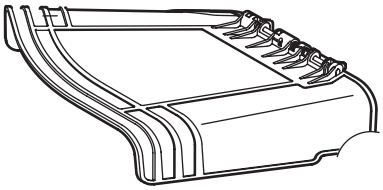	631-04254	Discharge Chute Assembly
	954-04167	Timing Belt
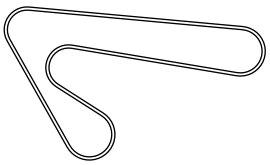	754-0266A	V-Belt

Phone (800) 965-4CUB to order replacement parts or a complete Parts Manual (have your full model number and serial number ready). Parts Manual downloads are also available free of charge at www.cubcadet.com.

Attachments & Accessories

10

The following attachments and accessories are compatible for Cub Cadet LTX 1042. See your Cub Cadet dealer or the retailer from which you purchased your tractor for information regarding price and availability.

CAUTION: Cub Cadet Series 1000 lawn tractors are NOT designed for use with any type of ground-engaging attachments (e.g. tiller or moldboard plow). Use of this type of equipment WILL void the tractor's warranty.

Model Number	Description
19A70002000	Mulch Kit, 42"
190-032-101	Snow Thrower, 42"
19A30003100	Twin Bagger, 42"
190-218-100	Weight Kit w/ Bracket
190-679-101	Front Bumper
190-833-000	Dozer Blade, 42"
190-916-100	Tire Chains, 20" x 10"
19A-102-100	Steel Cart, 16 Cubic Foot
19A-103-100	Lawn Sweeper
19A-104-100	Sprayer, 25 Gallon
19A-105-100	Broadcast Spreader
19A-106-100	Poly Cart, 10 Cubic Foot
19A-107-100	Tow-Behind Dethatcher, 42"
19A-108-100	Tow-Behind Plug Aerator, 40"
19A-109-100	Tow-Behind Spike Aerator, 40"
19A-113-100	Tow-Behind Poly Lawn Roller

Notes

11

CALIFORNIA EMISSION CONTROL WARRANTY STATEMENT

YOUR WARRANTY RIGHTS AND OBLIGATIONS

The California Air Resources Board and MTD Consumer Group Inc are pleased to explain the evaporative emission control system warranty on your 2008 lawn mower. In California, new lawn mowers must be designed, built and equipped to meet the State's stringent anti-smog standards. MTD Consumer Group Inc must warrant the EECS on your lawn mower for the period of time listed below provided there has been no abuse, neglect or improper maintenance of your lawn mower.

Your EECS may include parts such as the carburetor, fuel-injection system, the ignition system, catalytic converter, fuel tanks, fuel lines, fuel caps, valves, canisters, filters, vapor hoses, clamps, connectors, and other associated emission-related components.

Where a warrantable condition exists, MTD Consumer Group Inc will repair your lawn mower at no cost to you including diagnosis, parts and labor.

MANUFACTURER'S WARRANTY COVERAGE:

This evaporative emission control system is warranted for two years. If any evaporative emission-related part on your equipment is defective, the part will be repaired or replaced by MTD Consumer Group Inc.

OWNER'S WARRANTY RESPONSIBILITIES:

As the lawn mower owner, you are responsible for performance of the required maintenance listed in your owner's manual. MTD Consumer Group Inc recommends that you retain all receipts covering maintenance on your lawn mower, but MTD Consumer Group Inc cannot deny warranty solely for the lack of receipts.

As the lawn mower owner, you should however be aware that MTD Consumer Group Inc may deny you warranty coverage if your lawn mower or a part has failed due to abuse, neglect, or improper maintenance or unapproved modifications.

You are responsible for presenting your lawn mower to MTD Consumer Group Inc's distribution center or service center as soon as the problem exists. The warranty repairs should be completed in a reasonable amount of time, not to exceed 30 days. If you have a question regarding your warranty coverage, you should contact the MTD Consumer Group Inc Service Department at 1-800-800-7310.

GENERAL EMISSIONS WARRANTY COVERAGE:

MTD Consumer Group Inc warrants to the ultimate purchaser and each subsequent purchaser that the lawn mower is: Designed, built and equipped so as to conform with all applicable regulations; and free from defects in materials and workmanship that cause the failure of a warranted part to be identical in all material respects to that part as described in MTD Consumer Group Inc's application for certification.

The warranty period begins on the date the lawn mower is delivered to an ultimate purchaser or first placed into service. The warranty period is two years.

Subject to certain conditions and exclusions as stated below, the warranty on emission-related parts is as follows:

1. Any warranted part that is not scheduled for replacement as required maintenance in the written instructions supplied, is warranted for the warranty period stated above. If the part fails during the period of warranty coverage, the part will be repaired or replaced by MTD Consumer Group Inc according to subsection (4) below. Any such part repaired or replaced under warranty will be warranted for the remainder of the period.
2. Any warranted part that is scheduled only for regular inspection in the written instructions supplied is warranted for the warranty period stated above. Any such part repaired or replaced under warranty will be warranted for the remaining warranty period.
3. Any warranted part that is scheduled for replacement as required maintenance in the written instructions supplied is warranted for the period of time before the first scheduled replacement date for that part. If the part fails before the first scheduled replacement, the part will be repaired or replaced by MTD Consumer Group Inc according to subsection (4) below. Any such part repaired or replaced under warranty will be warranted for the remainder of the period prior to the first scheduled replacement point for the part.
4. Repair or replacement of any warranted part under the warranty provisions herein must be performed at a warranty station at no charge to the owner.
5. Notwithstanding the provisions herein, warranty services or repairs will be provided at all of our distribution centers that are franchised to service the subject engines or equipment.
6. The lawn mower owner will not be charged for diagnostic labor that is directly associated with diagnosis of a defective, emission-related warranted part, provided that such diagnostic work is performed at a warranty station.
7. MTD Consumer Group Inc is liable for damages to other engine or equipment components proximately caused by a failure under warranty of any warranted part.
8. Throughout the lawn mower warranty period stated above, MTD Consumer Group Inc will maintain a supply of warranted parts sufficient to meet the expected demand for such parts.
9. Any replacement part may be used in the performance of any warranty maintenance or repairs and must be provided without charge to the owner. Such use will not reduce the warranty obligations of MTD Consumer Group Inc.
10. Add-on or modified parts that are not exempted by the Air Resources Board may not be used. The use of any non-exempted add-on or modified parts by the ultimate purchaser will be grounds for disallowing a warranty claims. MTD Consumer Group Inc will not be liable to warrant failures of warranted parts caused by the use of a non-exempted add-on or modified part.

WARRANTED PARTS:

The repair or replacement of any warranted part otherwise eligible for warranty coverage may be excluded from such warranty coverage if MTD Consumer Group Inc demonstrates that the lawn mower has been abused, neglected, or improperly maintained, and that such abuse, neglect, or improper maintenance was the direct cause of the need for repair or replacement of the part. That notwithstanding, any adjustment of a component that has a factory installed, and properly operating, adjustment limiting device is still eligible for warranty coverage. The following emission warranty parts are covered:

(1) Fuel Metering System

- Cold start enrichment system (soft choke)
- Carburetor and internal parts
- Fuel pump
- Fuel tank

(2) Air Induction System

- Air cleaner
- Intake manifold

(3) Ignition System

- Spark plug(s)
- Magneto ignition system

(4) Exhaust System

- Catalytic converter
- SAI (Reed valve)

(5) Miscellaneous Items Used in Above System

- Vacuum, temperature, position, time sensitive valves and switches
- Connectors and assemblies

(6) Evaporative Control

- Fuel hose certified for ARB evaporative emissions 2008
- Fuel hose clamps
- Tethered fuel cap
- Carbon canister
- Vapor lines

CUB CADET LLC
MANUFACTURER'S LIMITED WARRANTY FOR
SERIES 1000 & SERIES 1500 TRACTORS

IMPORTANT: To obtain warranty coverage owner must present an original proof of purchase and applicable maintenance records to the servicing dealer. Please see the operator's manual for information on required maintenance and service intervals.

The limited warranty set forth below is given by Cub Cadet LLC with respect to new merchandise purchased or leased and used in the United States and/or its territories and possessions, and by MTD Products Limited with respect to new merchandise purchased or leased and used in Canada and/or its territories and possessions (either entity respectively, "Cub Cadet").

Cub Cadet warrants this product (excluding its *Normal Wear Parts, Batteries, Frame and Front Axle and Attachments* as described below) against defects in material and workmanship for a period of three (3) years or one hundred twenty (120) operation hours, whichever comes first, commencing on the date of original retail purchase or lease and will, at its option, repair or replace, free of charge, any part found to be defective in materials or workmanship.

Normal Wear Parts are warranted to be free from defects in material and workmanship for a period of thirty (30) days from the date of original purchase or lease. Normal wear parts include, but are not limited to items such as: belts, blades, blade adapters, grass bags, rider deck wheels, seats, and tires.

Batteries have a one-year prorated limited warranty against defects in material and workmanship, with 100% replacement during the first three months. After three months, the battery replacement credit is based on the months remaining in the twelve (12) month period dating back to the original date of original sale or lease. Any replacement battery will be warranted only for the remainder of the original warranty period.

Frame and Front Axle — Cub Cadet warrants the frame, and front cast iron pivot axle against defects in material and workmanship for a period of five (5) years or 500 hours, whichever occurs first, commencing on the date of original purchase or lease.

Attachments — Cub Cadet warrants attachments for this product against defects in material and workmanship for a period of two (2) years, commencing on the date of the attachment's original purchase or lease. Attachments include, but are not limited to items such as: grass collectors and mulch kits.

This limited warranty shall only apply if this product has been operated and maintained in accordance with the Operator's Manual furnished with the product, and has not been subject to misuse, abuse, neglect, accident, improper maintenance, alteration, vandalism, theft, fire, water, or damage because of other peril or natural disaster. Damage resulting from the installation or use of any part, accessory or attachment not approved by Cub Cadet for use with the product(s) covered by this manual will void your warranty as to any resulting damage. In addition, Cub Cadet may deny warranty coverage if the hour meter, or any part thereof, is altered, modified, disconnected or otherwise tampered with.

HOW TO OBTAIN SERVICE: Warranty service is available, WITH PROOF OF PURCHASE AND APPLICABLE MAINTENANCE RECORDS, through your local authorized service dealer. To locate the dealer in your area:

In the U.S.A.:
Check your Yellow Pages, or contact Cub Cadet LLC at P.O. Box 361131, Cleveland, Ohio 44136-0019, call 1-877-282- 8684
or log on to our website at www.cubcadet.com.

In Canada:
Contact MTD Products Limited, Kitchener, ON N2G 4J1, call 1-800-668-1238 or log on to our website at www.mtdcanada.com.

Without limiting the foregoing, this limited warranty does not provide coverage in the following cases:

a. Routine maintenance items such as lubricants, filters, blade sharpening, tune-ups, brake adjustments, clutch adjustments, deck adjustments, and normal deterioration of the exterior finish due to use or exposure.

b. Service completed by someone other than an authorized service dealer.

c. Cub Cadet does not extend any warranty for products sold or exported outside of the United States and/or Canada, and their respective possessions and territories, except those sold through Cub Cadet's authorized channels of export distribution.

d. Replacement parts and\or accessories that are not genuine Cub Cadet parts.

e. Transportation charges and service calls.

There are no implied warranties, including without limitation any implied warranty of merchantability or fitness for a particular purpose. No warranties shall apply after the applicable period of express written warranty above. No other express warranties beyond those mentioned above, given by any person or entity, including a dealer or retailer, with respect to any product, shall bind Cub Cadet. The exclusive remedy is repair or replacement of the product as set forth above. The terms of this warranty provide the sole and exclusive remedy arising from the sale and/or lease of the products covered hereby. Cub Cadet shall not be liable for any incidental or consequential loss or damage including, without limitation, expenses incurred for substitute or replacement lawn care services or for rental expenses to temporarily replace a warranted product.

Some jurisdictions do not allow the exclusion or limitation of incidental or consequential damages, or limitations on how long an implied warranty lasts, so the above exclusions or limitations may not apply to you.

In no event shall recovery of any kind be greater than the amount of the purchase price of the product sold. **Alteration of safety features of the product shall void this warranty.** You assume the risk and liability for loss, damage, or injury to you and your property and/or to others and their property arising out of the misuse or inability to use the product.

This limited warranty shall not extend to anyone other than the original purchaser or to the person for whom it was purchased as a gift.

HOW LOCAL LAWS RELATE TO THIS WARRANTY: This limited warranty gives you specific legal rights, and you may also have other rights that vary in different jurisdictions.

Cub Cadet LLC, P.O. BOX 361131 CLEVELAND, OHIO 44136-0019, Phone: 1-877-282-8684
MTD Products Limited, Kitchener, ON N2G 4J1, Phone: 1-800-668-1238

GDOC-100014 REV. B